MOTION IMAGERY STANDARDS PROFILE

Motion Imagery Standards Board

MISP-2015.1

October 2014

Table of Contents

List of Figures 5
List of Tables 5
Change Log 6
Forward 7
1 GENERAL 8
1.1 Scope 8
1.2 Objectives 8
1.3 Composition 8
1.4 MISB Standards Documents 9
2 TECHNICAL DATA 10
2.1 Motion Imagery Overview 10
2.1.1 Motion Imagery Definition 10
2.1.2 Motion Imagery Users 11
2.1.2.1 Contextual Interpretability 11
2.1.2.2 Visual Interpretability 11
2.1.3 Motion Imagery Functional Model 12
2.1.4 Motion Imagery Anatomy 14
2.1.4.1 Image Characteristics 14
2.1.4.2 Color Sampling Models 16
2.1.4.3 Aspect Ratio 16
2.1.4.4 Scanning Type 17
2.1.4.5 Sampling Format 18
2.1.5 Motion Imagery and Time 18
2.2 Motion Imagery Classes 19
2.3 Motion Imagery Domains 20
3 STRUCTURE 21
3.1 Enduring Principles 21
3.2 Common Attributes and Requirements 21
3.2.1 Motion Imagery 21
3.2.2 Metadata 22
3.2.3 Container 22
3.2.3.1 Material Exchange Format (MXF) 23
3.3 Single Image Extraction 23
3.4 Class Conversion 23
3.5 Class 0 Motion Imagery 24
3.5.1 Sampling Format 24
3.5.1.1 Sample Value Range 25
3.5.1.2 Pixel Value Range 26
3.5.1.3 Display Aspect Ratio and Pixel Aspect Ratio 26
3.5.1.4 Native Data Rate 26
3.5.1.5 Commercial Sampling Formats 27
3.5.1.5.1 Standard Definition 27
3.5.1.5.2 Enhanced Definition 27
3.5.1.5.3 High Definition 27
3.5.1.5.4 Ultra High Definition 27
3.5.2 Containers 27

3.5.2.1 Serial Digital Interface (SDI) 27
3.5.2.1.1 Timestamps 30
3.5.2.1.2 Metadata 30
3.5.2.1.3 Audio 30
3.6 Class 1 Motion Imagery 30
3.6.1 Sampling Format 30
3.6.2 Pixel Value Range 32
3.6.3 Compression 32
3.6.3.1 General 32
3.6.3.2 Infrared 33
3.6.4 Decompression 33
3.6.5 Annotations 35
3.6.6 Time Stamps 35
3.6.7 Metadata 35
3.6.8 Audio 36
3.6.9 Containers 36
3.6.9.1 MPEG-2 Transport Stream 36
3.7 Class 2 Motion Imagery 36
3.7.1 Sampling Format 37
3.7.1.1 Pixel Value Range 37
3.7.1.2 Image Size and Aspect Ratios 37
3.7.1.3 Bands 38
3.7.1.4 Number of Images per Second 38
3.7.2 Compression 38
3.7.2.1 General 38
3.7.3 Decompression 38
3.7.4 Annotations 39
3.7.5 Time Stamps 39
3.7.6 Metadata 39
3.7.7 Audio 39
3.7.8 Containers 39
3.7.8.1 MPEG-2 Transport Stream 39
3.7.8.2 MIE4NITF 39
3.8 Class 3 Motion Imagery 40
3.8.1 Motion Imagery Data Normalization 40
4 CONTENT 42
4.1 Introduction 42
4.2 Motion Imagery - Content 42
4.3 Audio Content 42
4.4 Metadata Content 43
4.4.1 Domains and Collections Overview 43
4.4.2 Metadata Domains 44
4.4.2.1 Administrative Domain 44
4.4.2.2 Aeronautical Domain 44
4.4.2.3 Combat Domain 45
4.4.2.4 Exploitation Domain 45
4.4.2.5 Image Space Domain 45
4.4.2.6 Meteorological Domain 46
4.4.2.7 Platform Domain 46
4.4.2.8 Quality Domain 46

4.4.2.9 Security Domain 47
4.4.2.10 Sensor Domain 47
4.4.2.11 Synthetic Aperture Radar (SAR) Domain 47
4.4.2.12 Temporal Domain 47
4.4.3 Application Areas and Collections 47
4.4.4 Airborne Collection 48
4.4.4.1 Airborne - UAS Collection 48
4.4.5 Ground Collection 48
4.4.6 Sea Collection 48
4.4.6.1 Sea - Below Surface Collection 48
4.4.7 Space Collection 48
4.4.8 Metadata Registries 48

5 DISSEMINATION 50
5.1 Internet Protocols 50
5.1.1 Real Time Protocol (RTP) 51
5.2 Transmitting Class 0 Motion Imagery 51
5.3 Transmitting Class 1 Motion Imagery 51
5.3.1 MPEG-2 Transport Stream over UDP/IP 51
5.3.2 MPEG-2 Transport Stream over RTP/UDP/IP 52
5.3.2.1 RTP with RTCP 52
5.3.2.2 Error Handling 52
5.4 Transmitting Class 2 Motion Imagery 52
5.4.1 JPEG Interactive Protocol (JPIP) 53
5.5 Transmitting Standalone Metadata 53

6 EXTERNAL INTERFACES 54
6.1 Cursor on Target (CoT) 54
6.2 STANAG 4559 Data Model 54
6.3 STANAG 4586 Control of Motion Imagery Payloads 54

Appendix A Deprecated/Retired Standards & Requirements 55
A.1 Deprecated/Retired Standards Documents 55
A.2 Deprecated Requirements 57

Appendix B References 58

Appendix C Acronyms 63

Appendix D Definitions and Terms 64

Appendix E MISB Documentation 65
E.1 Standards (ST) 65
E.2 Recommended Practice (RP) 65
E.3 Technical Reference Manual (TRM) 65
E.4 Engineering Guidelines (EG) 65

Appendix F MISB Processes 66
F.1 Document Development Process 66
F.2 Author Kit 66

List of Figures

Figure 1: Ecosystem of Standards Supporting the MISP 9
Figure 2: Illustration of Images Composing Motion Imagery 10
Figure 3: Motion Imagery Functional Model and Building Block Functions 12
Figure 4: Sequence of Images 14
Figure 5: Anatomy of an Image Using Color as an Example 15
Figure 6: Examples of Progressive-Global, Progressive-Rolling and Interlaced Scan 17
Figure 7: Classes of Motion Imagery 19
Figure 8: Class 0 Motion Imagery Conversion 24
Figure 9: Family of SDI Containers and Format Standards 29
Figure 10: MPEG-2 Transport Stream Container 36
Figure 11: Illustration of 2x2 Image Geometry 37
Figure 12: Motion Imagery Data Normalization 40
Figure 13: Example of a Collection (MISB ST 0601) 44

List of Tables

Table 1: Functional Model Components 12
Table 2: Building Block Functions 13
Table 3: Sampling Formats of Referenced Commercial Standards 25
Table 4: Example Native Data Rates 26
Table 5: SMPTE Standards for Motion Imagery Transport 28
Table 6: Exemplar Points of Interoperability 31
Table 7: Exemplar Points of Interoperability for Legacy Systems 34
Table 8: Metadata Registry Documents 49
Table 9: Internet Protocols 50

Change Log

Forward

The Motion Imagery Standards Board (MISB) produces the Motion Imagery Standards Profile (MISP).

The MISP references technical specifications developed by the MISB and commercial industries. The MISP contains normative requirements. These requirements use the word "shall" and are mandatory for compliance to the MISP.

Commercial references cited in this document are available from industry organizations. References developed by the MISB are available under

MISB Public Web Site: http://www.gwg.nga.mil/misb or

NSG Registry Web Site: https://nsgreg.nga.mil/misb.jsp

The contents of this document are subject to continuing work within the MISB. Any changes and modifications to this document will be re-released by the MISB with an identifying change of release date when issued in a succeeding year, or an increase in version number if within the same year as follows:

MISP-YEAR.VersionNumber

1 GENERAL

1.1 Scope

The Motion Imagery Standards Profile (MISP) provides guidance for consistent implementation of Motion Imagery Standards to achieve interoperability in both the communication and functional use of Motion Imagery Data. The MISP states technical requirements common to the United States (U.S.) and the North Atlantic Treaty Organization (NATO) coalition partners. Further information on NATO-specific guidance and governance may be found in STANAG 4609 [1]; U.S.-specific guidance and governance may be found in [2] and [3] respectively.

The MISP documents the **Structure** for data, which includes formats, encodings and containers, and the **Content** of data, which includes common and application-specific information that populates these structures. The **Structure** is based on commercial standards from Standards Development Organizations (SDO), such as ITU, ISO, SMPTE, etc., and non-commercial standards developed to support governing organizations specific activities. The **Content** is principally based on non-commercial standards that support capability-based needs. Together the Structure and Content constitute Motion Imagery Data that meets compliance to the MISP.

The MISB does not issue guidance on the mechanical interconnects between sub-systems.

1.2 Objectives

The primary objective of the MISP is to further interoperability, which is key to reducing cost, effort and time when specifying, implementing, testing and using Motion Imagery Systems.

Interoperability is the ability of systems, units or forces to provide data, information, materiel, and services to and accept the same from other systems, units, or forces. This enables the use of data, information, materiel and services exchanged to operate effectively together.

Standards provide the foundation for interoperability. Within the MISP, standards are referenced as mandatory requirements statements with the word “shall”.

Standards and requirements alone, however, are not sufficient to guarantee interoperability. Compliance to the standards and requirements is mandatory, and can only be guaranteed through rigorous testing procedures.

1.3 Composition

The ecosystem of standards supporting the MISP is shown in Figure 1. This includes: MISB standards developed as new standards and profiles of existing standards; standards produced by commercial SDO’s; standards produced by non-commercial SDO’s; and support guidance (i.e. TRM and Motion Imagery Handbook) materials produced by the MISB. The MISB annually updates its standards along with all externally referenced standards. Cost and system capability implications to fielded and late stage acquisition systems are considered in these updates.

The MISP is a high-level document providing requirements that can be referenced in acquisition and implementation activities. A companion document – the Motion Imagery Handbook [4] – supports material presented in the MISP providing definitions of terms used with more background and technical detail on the topics found here.

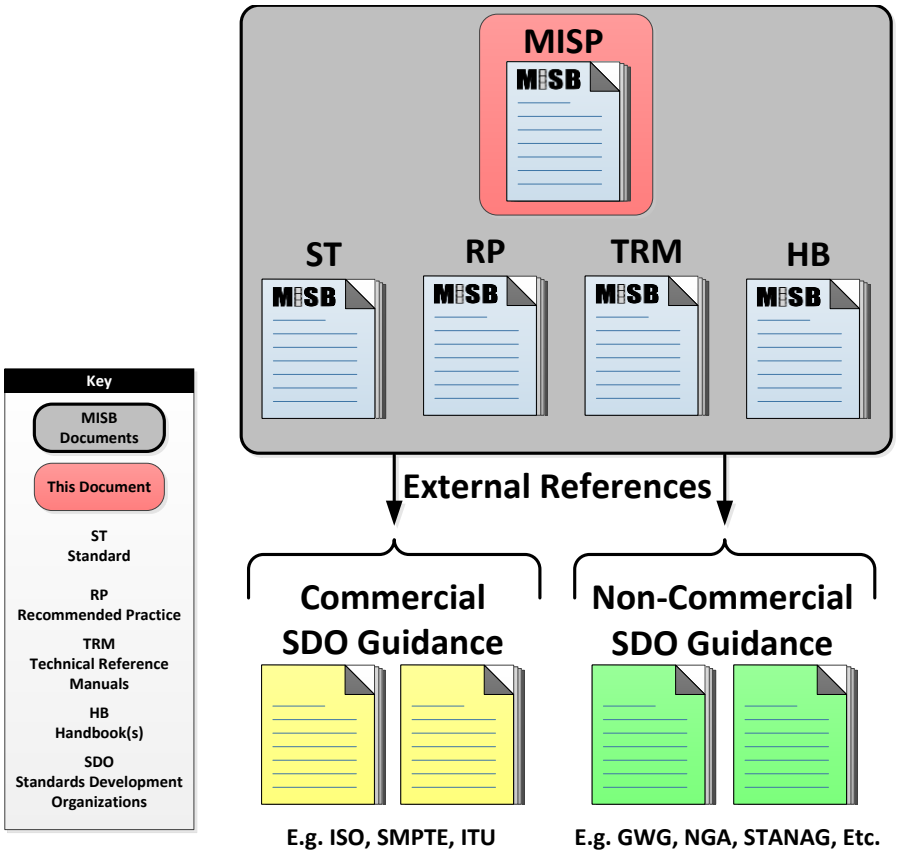

Figure 1: Ecosystem of Standards Supporting the MISP

1.4 MISB Standards Documents

The MISP leverages existing Standards where possible. Often, an existing Standard is too broad in scope to ensure interoperability, in which case the MISB selects a subset of its capabilities, called a Profile. This Profile becomes a MISB standard. In cases where no standard exists to meet a desired capability (i.e. a technology gap), an independent MISB standard is developed in partnership with the community of practice. The MISB publishes its standards documents as MISB Standards (ST) and MISB Recommended Practices (RP). See Appendix E for further information about MISB documentation.

The MISP is organized into five sections: Technical Data (Section 2), Structure (Section 3), Content (Section 4), Dissemination (Section 5) and External Interfaces (Section 6). The Technical Data section provides basic information and context for applying the Content to the Structure. The Structure section states requirements mandatory in order to be compliant to the MISP; these include the formatting and encoding of Motion Imagery, Audio and Metadata. The Content section states additional requirements on domain-specific content, such as airborne or ground-based Motion Imagery Data, that populates the Structure. The Dissemination section identifies the methods and requirements used for transmission of Motion Imagery. The External Interfaces section provides mappings of Motion Imagery Data to external Standards for inclusion into enterprise systems.

2 TECHNICAL DATA

For a Motion Imagery System to produce data that can be shared and exploited, it must be constructed on principles known and used by others, which provides the framework for interoperability. Terms, definitions, intended uses, protocols, formats, encoding, syntax and semantics must all be well defined; this includes common terms not sufficiently defined or defined differently by different communities of practice. This information must be published, agreed upon, tested, and made available to others. Standards provide an optimal foundation in meeting these criteria.

2.1 Motion Imagery Overview

In this section, Motion Imagery is defined along with its uses and characteristics. Additionally, this overview provides a common lexicon for interpreting the requirements. A Motion Imagery Functional Model is introduced as a framework to facilitate relating where the standards and requirements address the various stages within a Motion Imagery System. Four classes of Motion Imagery are defined, which assists in differentiating Motion Imagery formats and their respective class-specific requirements. Motion Imagery Domains are defined to provide groupings of application specific requirements.

2.1.1 Motion Imagery Definition

Motion Imagery is a sequence of Images, that when viewed (e.g. with a media player) must have the potential for providing informational or intelligence value. This implies the Images composing the Motion Imagery are: (1) generated from **sensed data,** and (2) related to each other both in **time and space**. Some sensed data, such as Visible Light and Infrared, can be used directly to form Images, while others, such as SAR and LIDAR, require a conversion to a viewable Image. To satisfy the time and space relationship the capture time (i.e. the time the Image was taken) of each successive Image must be sequentially in order <u>and</u> the space relationship between each successive Image must have some recognizable visual overlap with the previous Image. These relationships are illustrated in Figure 2.

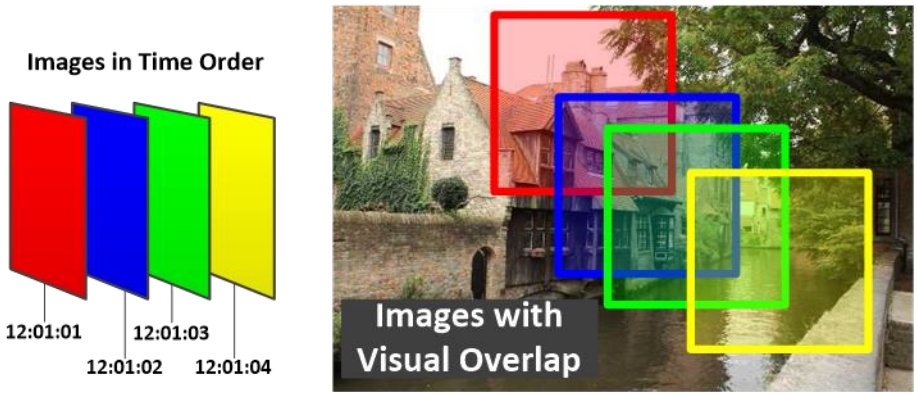

Figure 2: Illustration of Images Composing Motion Imagery
Source: MISB provided photo.

The terms **Video** and **Full Motion Video (FMV)** are often used either in place of or interchangeably with the term Motion Imagery. Video is a more general term used to describe a

sequence of pictures; however, unlike Motion Imagery, Video is not required to have the same data source, time and space restrictions. For instance, Video is not required to provide information or be an intelligence source; it can be a simple playback of pictures or animations. Motion Imagery is a more restricted but highly structured form of generalized Video and is designed to provide greater information value.

Full Motion Video (FMV) is a term used within the military and intelligence communities. As used, FMV implies a very narrow subset of Motion Imagery; one that assumes geo-spatial metadata, commercial image formats and playback rates. Because FMV is not formally defined and can mean different things to different people, the term FMV should not be used in any contractual language. For more discussion on Motion Imagery, Video and FMV see [4].

Motion Imagery Systems are systems that provide the functionality of collecting, encoding, processing, controlling, disseminating, exploiting, viewing, and/or storing Motion Imagery.

2.1.2 Motion Imagery Users

To users, Motion Imagery provides a visual source of information to be interpreted and converted into intelligence or tactical information. The process of interpreting Motion Imagery is called Motion Imagery Exploitation. There are many different levels of Motion Imagery Exploitation depending on the needs of the end customer and time allowed for performing the exploitation. For example, one level of Exploitation might provide "situational awareness"; another might perform complex analysis with many-tiered reports and highlight clips or detailed geo-registration created. The possible outcomes for exploitation are directly linked to the capabilities of the system providing the Motion Imagery. It is important that the desired exploitation goals and requirements be understood in the development of a Motion Imagery System. Two factors directly impact the exploitability of Motion Imagery: **Contextual Interpretability** and **Visual Interpretability**.

2.1.2.1 Contextual Interpretability

The Motion Imagery *context* includes all of the information about the where, when, and how the Motion Imagery is formed. Some examples of context information include: sensor position relative to the scene, when the Motion Imagery was imaged, how the image was formed (i.e. from Visible light, IR, other). The principle component in Motion Imagery context is the Image Space information, which provides the relationship of the Image to the world. Specifically, it is the location of all Image points in world space coordinates (e.g. Latitude, Longitude, Height or X, Y, Z) and time. A very high level of Contextual Interpretability is possible when the positions of all world space points can be identified in an Image. The more accurate the Image Space information the higher the quality of the Contextual Interpretability. When the Motion Imagery context is not known the exploitation results may become less meaningful, or even meaningless, and there can be a large cost (in time, computation and/or money) for determining this information. Motion Imagery sensors and processors are capable of measuring, computing and embedding context information along with the Motion Imagery in the form of metadata.

2.1.2.2 Visual Interpretability

Visual Interpretability is the ability to recognize objects and events within the Motion Imagery. Recognition is dependent on the overall Motion Imagery Quality, which is a measured ability to

visually recognize what the Image information represents. Motion Imagery Quality can be affected by the atmosphere, optics, sensor, compression, delivery methods and other factors on its way to exploitation. Motion Imagery Quality is fully discussed in [5].

2.1.3 Motion Imagery Functional Model

A Motion Imagery Functional Model helps provide context for the individual MISP Standards. The Functional Model is organized considering the logical data flow from the Scene to Exploitation as shown in Figure 3; however, the only required function is the Imager. Note that the order of the functions is not always as indicated.

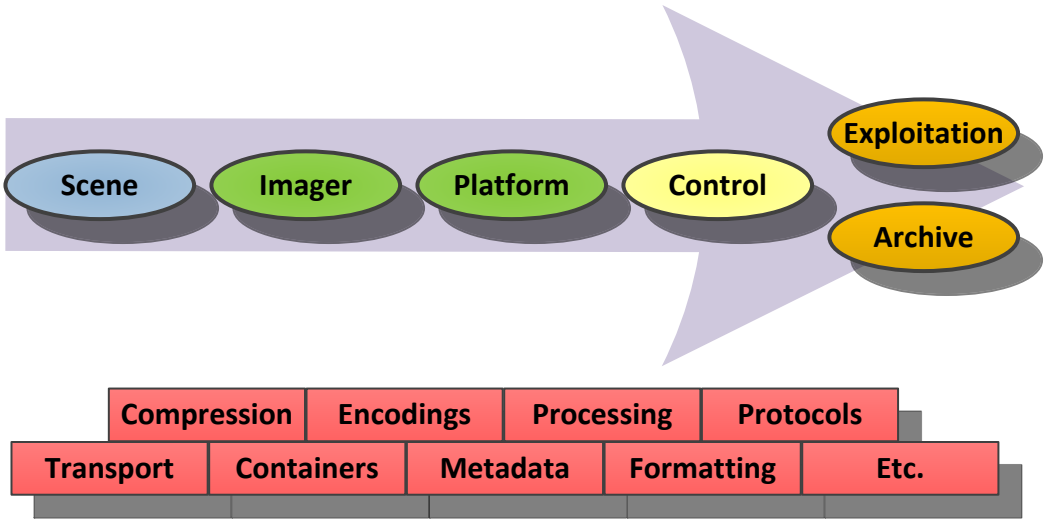

Figure 3: Motion Imagery Functional Model and Building Block Functions

This model offers a framework beginning with a **Scene** as imaged with an **Imager** through **Exploitation** and **Archive** for understanding where the standards and requirements address various elements in a Motion Imagery System. The Imager is typically a subsystem on some Platform, which could be airborne, ground, sea or other, and under user direction via a Control means. Motion Imagery may be collected for various phases of Exploitation and/or Archived for later reuse. The Functional Model components are summarized in Table 1 with more details found in [4].

Table 1: Functional Model Components

Component	Description
Scene	The Scene is the area viewed by an Imager. When an Imager is imaging a Scene, typically it measures a set of one or more data samples from one or more different modalities (e.g. Visible Light, Infrared, LIDAR, etc.) radiated or reflected from the objects in the Scene.
Imager	The Imager converts information from a Scene into an Image, and when possible provides support information about the Imager characteristics and time when the Image was captured.

Platform	A static or movable system to which a Sensor (Imager) is attached. A platform may provide information regarding its environment in the form of metadata.
Control	A device that directs the Imager (and Platform) position, orientation or other attributes. Motion Imagery Systems generally allow for control of the Imager, whether orienting its direction dynamically (i.e. pan/tilt), or modifying its parameters, such as contrast, brightness, image structure, zoom, etc.
Exploitation	The end use of the Motion Imagery. Exploitation ranges from simple situational awareness – the when and where, to in-depth extraction of detected features, measurement, and coordination with other intelligence data. Exploitation may be by human, machine, or both, and may occur in real-time or post collection.
Archive	Storage of all Motion Imagery from the Sensor and additional Exploitation data. Motion Imagery is stored for later phases of exploitation, generating reports and historical reference. An important aspect of storage is file format. A standardized file format for the search and discovery of Motion Imagery is critical to reuse.

In support of the Functional Model, there are a number of utility Building Block Functions. The Building Block Functions populate a common toolbox of standards that as a sum-of-parts provide a given capability. These functions are defined with requirements that assure optimal interoperability when functioning together and when used across various implementations. The MISP identifies requirements at the Functional Model level that facilitate interoperability of the Building Block Functions. Table 2 lists the most common types of Building Block Functions.

Table 2: Building Block Functions

Building Block Function	Description
Compression	Compression is an algorithmic sequence of operations designed to reduce the quantity of data in non-compressed Motion Imagery.
Encodings	Encodings are specific representations of data. As an example, KLV (Key Length Value) is designed as an efficient and extensible representation of metadata.
Format	How digital data is organized or arranged.
Container	A container holds data in a defined format. A container can hold other formats. Example: the MPEG-2 Transport Stream container is defined by a standard, which can hold Motion Imagery of its own format, and Metadata of its own format.
Protocols	Protocols provide the rules for systems to communicate. For example, a protocol defines the interface specifications for data transfer between functions along the Motion Imagery Functional Model.
Processing	Processing modifies or augments the Motion Imagery. Processing includes data type conversions, sampling format changes and enhancement algorithms. Examples include image transformations, and Infrared data range scaling.

2.1.4 Motion Imagery Anatomy

As defined in Section 2.1.1, Motion Imagery is a temporal sequence of **Images** which overlap spatially, as illustrated in Figure 4.

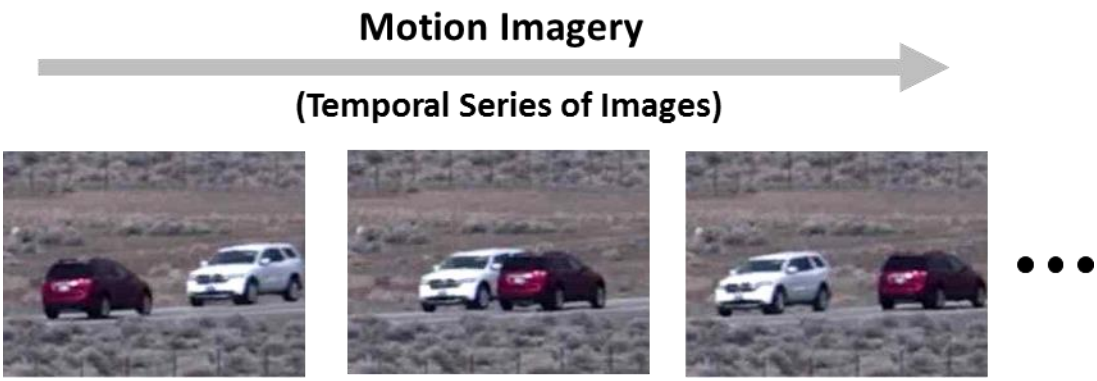

Figure 4: Sequence of Images
Source: MISB provided photo.

Each Image in the sequence represents a defined instant or period of time. The rate each Image is captured is called the **Native Rate** and is measured in Images per unit of time (e.g. seconds, minutes, etc.). The rate at which each Image is displayed is called the **Display Rate**. The Native Rate and Display Rate do not necessarily have to be the same. For example, the Display Rate can be made faster than the Native Rate by skipping Images; conversely, the Display Rate can be made slower by repeating Images.

> Note on terminology: Within the Motion Imagery Handbook [4], the term **Image** is defined as a Frame with Pixels derived from a set of sensed phenomena. Because industry uses the term Frame when quoting the number of Images per Second i.e. Frames per Second, both are considered equivalent in this document.

2.1.4.1 Image Characteristics

An Image is a rectangular array of **Pixels**, as shown in Figure 5. Two characteristics of an Image are the number of Pixels per Image, which is the product of the number of Columns of Pixels by the number of Lines of Pixels, and the Image Aspect Ratio, which is the ratio of the number of Columns to Lines of Pixels.

Each Pixel in an Image is a computed value using the data from one or more measurement arrays, called **Bands**. The count of Bands used to compute the Pixels in the Image is called the Number of Bands, and it is a constant value for the whole Image. For example, a grey-scaled Image is a one Band Image; color Images are three Band Images (e.g. Figure 5); multi- and hyper-spectral imagery would use many Bands.

Each Band is an array of **Samples** that represent measured phenomena, for example the amount of red, green or blue light, as illustrated in Figure 5. The number of Samples in a Band is computed by multiplying the number of Columns and Lines of Samples in that Band. Each Band in an Image may have a different number of Samples; thus, to form a Pixel, Sample data may be

shared between multiple Pixels, such as in 4:2:2 and 4:2:0 formats (see Section 2.1.4.2). The number of Samples per Image is computed by summing the number of Samples per Band.

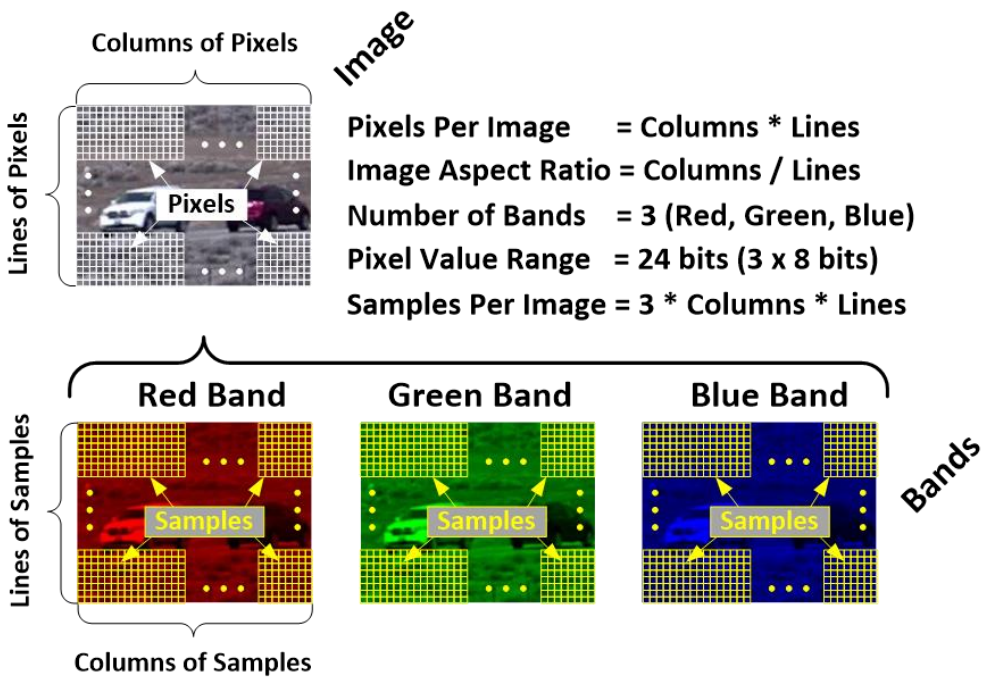

Figure 5: Anatomy of an Image Using Color as an Example
Source: MISB provided photo.

An Imager produces Samples within a numerical data range bounded by a minimum and maximum value and divided into intervals. This process is called quantization. The number of intervals, or quantization, is determined by the number of bits used to represent the numerical data range. For example, 8 bit quantization will have 256 (2^8) intervals, while 10 bit quantization will have 1024 (2^{10}) intervals. When the numerical data range is divided into equal intervals this is called uniform quantizing, and is the most common quantization found in Motion Imagery and Audio signal processing.

The **Sample Value Range** is a quantized value of a measured phenomenon and is expressed in bits per Sample (bps). Each Band's Sample Value Range can be different from other Bands in the same Image.

Each **Pixel** in an Image represents a combination of a number of Samples collectively taken from the number of Bands in an Image. The **Pixel Value Range** is the total number of bits that represent the collective Samples. For example, a color image with 8 bits in each of three Bands would have a Pixel Value Range of 24 bits. Likewise, an Image with 10 bits per Band and 5 Bands would have a Pixel Value Range of 50 bits.

Determining the Pixel Value Range of multi-band imagery is straightforward when all Samples in all Bands have the same number of bits. Determining the Pixel Value Range of three band color imagery is based on the Color Sampling Model used.

2.1.4.2 Color Sampling Models

Color is typically expressed with a triplet of Bands defined by a color model. For example, RGB (Red, Green, and Blue) describes which wavelengths of light produce a given color. Color Sampling describes the Samples required to represent each color Band, and the notation used is three numbers separated by colons, for instance 4:4:4, 4:2:2, 4:2:0, etc. In the 4:4:4 color model, each color Band contains the same number of Samples (i.e. the same sampling). A color Pixel is then represented by three Samples – one Sample from each color Band.

The human eye, however, is more sensitive to Image brightness than color. Some color models leverage this to reduce the data needed to convey color. Two common color models – 4:2:2 and 4:2:0 – transform the RGB color Bands into a luminance (brightness information) Band and two chrominance (color information) Bands. The luminance Band is a linear combination of the RGB Bands. Each chrominance Band is computed as a color-difference signal, and so in the absence of color the chrominance Bands are zero. Because the human eye is more sensitive to brightness, the neighboring color-difference Samples can be averaged then shared with more than one brightness Sample, which reduces the number of color-difference values (i.e. Samples) in an Image.

These transformations and the sharing reduce the quantity of Samples for the three Bands by one-third (for 4:2:2) and one-half (for 4:2:0). Often these transformations precede an Image compression operation. More detail on these color models can be found in the Motion Imagery Handbook [4].

2.1.4.3 Aspect Ratio

Image Aspect Ratio is typically expressed as the ratio of Image width to height, i.e. 16:9, 4:3, etc. However, this definition does not completely characterize why some Images when viewed are geometrically incorrect, or a portion of an Image is cut off. Different geometric effects will be seen on different displays depending on how the internal display processing interprets the received format. Understanding these effects are important in Exploitation when performing mensuration or using automated analyses processes. To account and understand for these effects specific terms such as *Pixel Aspect Ratio* (PAR), *Source Aspect Ratio* (SAR) and *Display Aspect Ratio* (DAR) are defined.

Each Pixel created by an Imager has a height and width dimension, usually measured in micrometers. PAR is expressed as a ratio of the width divided by the height. When this ratio is 1:1 a Pixel is called square. The user of Image data must be aware of the PAR in both preprocessing, display and post-processing. In pre and post processing, improper understanding of PAR can cause inaccurate data resulting in incorrect analysis and measurement. In display, improper accounting of PAR can produce visible geometrical distortion.

The SAR is the Image Aspect Ratio acquired at the Imager. This could be the Imager's native format, or a converted format (see Figure 8). For example, a high-definition Imager has a SAR of 16:9. The MISB specifies that the SAR be in the range of [0.25, 4.0], which is effectively a 1:4 to a 4:1 ratio limit. MISB TRM 1404 [6] discusses this reasoning.

Requirement	
MISP-2015.1-01	The Motion Imagery Source Aspect Ratio (SAR) shall be in the range [0.25, 4.0]. (see MISB TRM 1404 [6])

The DAR is the ratio of horizontal to vertical dimensions of the display area.

The relation between these three metrics is SAR x PAR = DAR, and this relationship can be used to understand source-to-display Image irregularities. Guidance on SAR, DAR and PAR can be found in MISB RP 0904 [7], which also provides guidance for scaling and cropping Motion Imagery.

2.1.4.4 Scanning Type

Scanning Type defines the method an Imager uses to expose, capture and form an Image. Three Scanning Types are common: progressive-global, progressive-rolling (also called rolling shutter) and interlaced. With progressive-global scanning, a complete Image is exposed, captured and formed simultaneously. In progressive-rolling scan, each Line of the Image is exposed and captured sequentially; the Image is formed after all Lines have been captured. In interlaced scan, the Image is exposed and captured in two passes. First the odd Lines are exposed and captured followed by a second pass, where the even Lines are exposed and captured; the complete Image is formed by interleaving the Lines from each half-Image together.

Figure 6, shows two Images and the possible distortions that can occur to each Image for each Scanning Type. The first Image illustrates the distortions that can occur with moving objects (vehicle) within the scene. The second Image illustrates the distortions that can occur when the sensor is moving. For either Image, when using progressive-global scan the object shows no distortion. With progressive-rolling scanning the top of each image is captured before the bottom of the image, so the object appears tilted and distorted. With interlaced scanning, because half of the image is captured (i.e. the odd rows) before the second half of the image (i.e. the even rows), the edges of the object are torn and displaced making the object nearly unrecognizable.

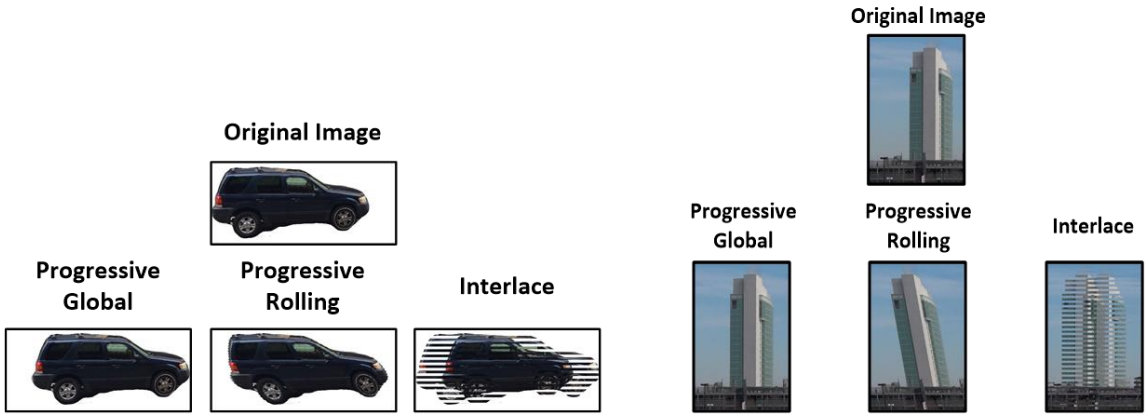

Figure 6: Examples of Progressive-Global, Progressive-Rolling and Interlaced Scan
Source: MISB provided photo.

Progressive-global scan does not introduce temporal artifacts like progressive-rolling and interlaced scan, and therefore, is far superior in faithfully capturing motion. Eliminating temporal

artifacts, such as edge tearing, facilitates image exploitation and improves compression efficiency.

Given the obvious advantage of progressive-global over progressive-rolling the MISB recommends the use of progressive-global. Given the obvious advantage of progressive-scan over interlaced-scan, the MISP mandates the use of progressive-scan (either progressive-global or progressive-rolling) for all types of Motion Imagery with the following requirement:

Requirement	
MISP-2015.1-02	The Motion Imagery format at the Imager (Sensor) and for any Motion Imagery conversions or transcodes shall be a progressive-scan format.

This requirement specifically bans the use of interlaced-scan formats, such as NTSC [8], PAL [9], SECAM [9], and High Definition 1080i [10] by any MISP compliant system; this ban includes interlaced-scan formats at the Imager (Sensor) and for any Motion Imagery conversions or transcodes.

2.1.4.5 Sampling Format

Many sensors use commercial camera technologies to produce Motion Imagery that adheres to specific formats. The industry term **Sampling Format** describes the Motion Imagery Format. Sampling Format is defined by a list of characteristics:

- Number of Samples in a Band
- Number of Bands in an Image
- Number of Pixels in an Image
- Color Model (if used)
- Number of Images per second
- Scanning Type
- Aspect Ratio
- Vertical Image size (Number of Lines in an Image)
- Horizontal Image size (Number of Columns per Line in an Image)

2.1.5 Motion Imagery and Time

Time is a critical aspect of Motion Imagery. It forms the basis of how Motion Imagery is captured and displayed based on the sampling format selected. Time links different sources of information related and gathered together. Time is used to synchronize the presentation of data, such as Motion Imagery, Metadata and Audio.

There are two types of time that serve different purposes: **Absolute Time** and **Relative Time**. Absolute Time is based on a well-defined reference source, such as Coordinated Time (UTC) and often referred to as “wall clock”, and is used to establish coordination amongst sensing systems that collect information (i.e. Motion Imagery, Metadata, etc.) and other information sources. Relative Time is based on an internal or local timing reference that may be independent of an external reference, and is used to maintain the synchronization of data intended for presentation on a display, (i.e. Motion Imagery, Metadata and Audio rendered simultaneously).

Absolute Time within the MISP is expressed as a **Precision Time Stamp**, which is defined in MISB ST 0603 [11]. The presence of a Precision Time Stamp is mandatory for all Motion Imagery; it is also mandatory for Metadata packets that include a Metadata element for the Precision Time Stamp.

Requirement(s)	
MISP-2015.1-03	All Motion Imagery shall include a Precision Time Stamp in accordance with MISB ST 0603 [11].
MISP-2015.1-04	Any Metadata that contains a time stamp element shall include a Precision Time Stamp in accordance with MISB ST 0603 [11].

One type of a Relative Time measure is a **Commercial Time Stamp**, which is also defined in MISB ST 0603.

2.2 Motion Imagery Classes

Motion Imagery spans a large set of imagery types and sampling formats. Motion Imagery Classes are defined to help group Motion Imagery according to their own unique methods for creation, delivery and storage. Four of the characteristics described in Section 2.1.4 help to classify Motion Imagery: Pixel Value Range, Number of Bands, Number of Pixels per Image and Number of Images per Second. Motion Imagery is produced by many sources and these sources require certain Sampling Formats. In consideration of this varied range of Sampling Formats and potential use cases, the MISP segments Motion Imagery into Classes (see Figure 7) that cite class-specific requirements and standards as follows:

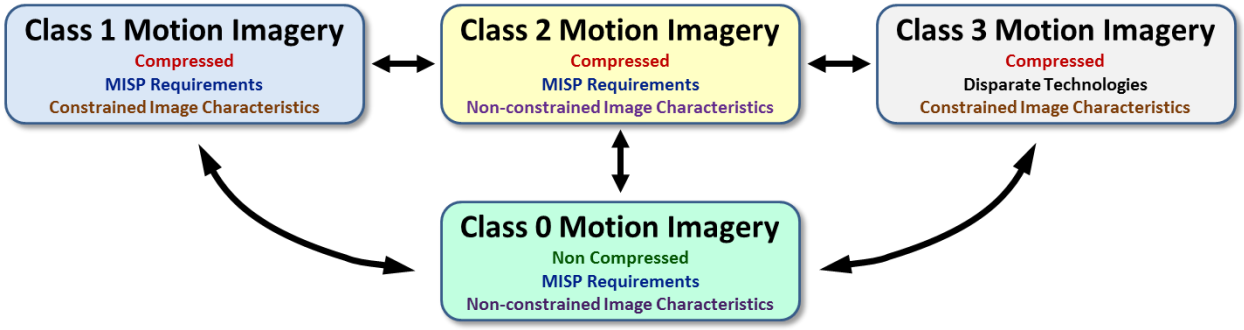

Figure 7: Classes of Motion Imagery

Class 0 Motion Imagery represents the collective requirements for non-compressed Motion Imagery, Metadata, Audio and suitable Containers. The non-compressed Motion Imagery of Class 0 Motion Imagery allows for an unrestricted Pixel Value Range, Number of Bands, Number of Pixels per Image and Number of Images per Second. Examples include: 14-bit infrared, 10-Band Hyperspectral, 3-Band High Definition. Class 0 Motion Imagery can be converted to Class 1 Motion Imagery or Class 2 Motion Imagery.

Class 1 Motion Imagery represents the collective requirements for compressed Motion Imagery, Metadata, Audio and suitable Containers. Class 1 Motion Imagery is applicable when delivering monochrome and color Motion Imagery in cases where the transmission bandwidth prohibits the use of Class 0 Motion Imagery. Example: streaming of H.264/AVC compressed airborne Motion

Imagery. Class 1 Motion Imagery, based on standards from commercial SDO's, is limited to a maximum of three Bands of color.

Class 2 Motion Imagery represents the collective requirements for compressed Motion Imagery, Metadata, Audio and suitable Containers. Unlike Class 1 Motion Imagery, Class 2 Motion Imagery allows a wider range of image characteristics. Examples include: High frame rate scientific imaging, Large Volume Motion Imagery, high bit-depth compressed infrared. Class 2 Motion Imagery is based on standards from commercial SDO's and non-commercial standards unique to a governing organization.

Class 3 Motion Imagery represents the collective requirements for conversion of Motion Imagery, Metadata, Audio and Containers to meet Class 1 Motion Imagery requirements. Class 3 Motion Imagery is produced by many sources external to the MISB community that may use disparate technologies, typified by cell phones, mobile devices and surveillance cameras, such as traffic cameras, retail cameras, and other industrial cameras. Class 3 Motion Imagery may use formats, compression and Containers that are not compliant with the MISP; therefore, Class 3 Motion Imagery systems are not permitted to be procured for government applications.

2.3 Motion Imagery Domains

Motion Imagery Domains are application areas of Motion Imagery that have their own unique characteristics; for example, Airborne, Ground, Maritime, Surface, Underwater, Combat, Visual Light, Infrared (IR) and Synthetic Aperture Radar (SAR) Motion Imagery are all different Domains. Domains provide a method of grouping common elements for developing a set of Standards or Recommended Practices. Domains can overlap, for example an IR-Combat-Airborne Motion Imagery System will have characteristics of IR, Combat and the Airborne Domains; therefore, standards that apply to all three Domains are applicable.

3 STRUCTURE

In this section, the requirements on the Structure for the different Motion Imagery Classes are listed. This Structure is based on commercial standards from SDO's, such as ITU, ISO, SMPTE, etc., and non-commercial standards developed to support governing organizations specific activities. The Motion Imagery Classes localize requirements to general application areas; however, applications may span Classes, so the conversion from one Class to another is discussed.

Several enduring principles underlie the path forward towards improving interoperability and image quality, both which will lead to improved information gathering and exploitation.

3.1 Enduring Principles

The following is a roadmap for continued improvement of the technical aspects of Motion Imagery capabilities across the enterprise:

- Optimize Motion Imagery spatial, temporal and spectral dimensions to meet performance objectives.
- Maximize and retain image quality throughout the entire image handling chain given cost and infrastructure constraints.
- Incorporate threshold Metadata to support basic situational awareness, discovery & retrieval, and cross-domain dissemination and objective Metadata to support higher fidelity exploitation based on system requirements.
- Give full consideration to expected performance improvements versus life cycle costs and impacts to infrastructure when considering a move to new compression and format standards.

3.2 Common Attributes and Requirements

There are many methods for representing Motion Imagery, Metadata and Audio information. Of these, most critical to Motion Imagery Exploitation is the visually viewable data (i.e. the Motion Imagery). It is the Metadata, however, which provides the essential contextual information (see Section 2.1.2.1), and greatly increases the value of the Motion Imagery. The Container is the unifying package that holds the Motion Imagery and Metadata. Motion Imagery, Metadata, Audio and Container each have a defined structure and encoding for its data. This structure forms the basis of interoperability.

3.2.1 Motion Imagery

There are two basic representations for Motion Imagery: analog and digital. Although analog representations for moving pictures underscored the beginnings of commercial television, these technologies have been replaced with digital representations that supply great advantages in image quality, usability and storage. The following requirements are intended to leverage these advantages by mandating digital representations of Motion Imagery across all classes of Motion Imagery. Legacy Motion Imagery is Motion Imagery found in systems that pre-date the MISP requirements for the use of digital Motion Imagery.

Requirement(s)	
MISP-2015.1-05	Legacy Motion Imagery in analog form shall be converted into digital form.
MISP-2015.1-06	Motion Imagery in digital form shall remain in digital form.

Digital Motion Imagery produces a large amount of data. Compression technology reduces the amount of data to make Motion Imagery more usable across more applications. Motion Imagery compression is a sophisticated process designed to eliminate redundant data with controls to trade the amount of compression for image quality. There are two types of compression: temporal and spatial. Temporal compression removes redundancies across multiple Images over time. Spatial compression removes local redundancies within an Image. An Encoder executes a compression algorithm, and produces a compressed signal according to a specific data format called the bit-stream. Encoders may perform spatial only, or a combination of both spatial and temporal compression.

Decompression reverses this process by converting compressed Motion Imagery back to a non-compressed state. Because compression generally reduces image quality, the steps of compression and decompression are not perfectly reversible; that is, the decompressed Image will have lower image quality than the Image prior to compression. While there are visually lossless compression technologies, the amount of data reduction possible is not sufficient for meeting many common user requirements. A Decoder performs decompression; in this case, decompressing Motion Imagery.

3.2.2 Metadata

There are multiple methods for formatting Metadata. A common method used in Class 0 Motion Imagery and Class 1 Motion Imagery is KLV (Key-Length-Value), which is a very efficient method of encoding metadata. The following requirements apply to all Metadata within the MISP developed as KLV.

Requirement(s)	
MISP-2015.1-07	KLV (Key-Length-Value) Metadata shall be encoded in accordance with SMPTE ST 336 [12].
MISP-2015.1-08	KLV Metadata shall be formatted in accordance with MISB ST 0107 [13].
MISP-2015.1-09	When using KLV and mapping between floating point values and integer values, the mapping shall comply with MISB ST 1201 [14].
MISP-2015.1-10	Multi-dimensional arrays of data expressed in KLV shall be formatted according to MISB ST 1303 [15].

3.2.3 Container

A Container plays an important role in furthering interoperability. Too many Container types place undue burden on systems in the unwrapping and rewrapping of data. The “optimal” Container serves a wide range of capabilities, and provides growth as new capabilities are developed. The following requirement forces the use of only approved Containers.

Requirement	
MISP-2015.1-11	Only those Containers specified in this document (MISP) shall be used for Class 0 Motion Imagery, Class 1 Motion Imagery, and Class 2 Motion Imagery.

Containers specific to a Class of Motion Imagery are discussed in the appropriate sections. Requirements on Containers that apply across more than one Class of Motion Imagery are identified here.

3.2.3.1 Material Exchange Format (MXF)

The Material Exchange Format (MXF), SMPTE ST 377-1 [16], finds use in applications such as the exchange of Motion Imagery Data amongst collection platforms, and in support of random access to databases based on metadata indexing. MXF provides advanced features for accessing and exchanging Motion Imagery Data over communication networks.

As the MXF standards afford a large number of options to support many application domains, the following requirements limit MXF to a minimum level to achieve interoperability between the implementing entities:

Requirement(s)	
MISP-2015.1-12	For file exchange, operational patterns 1a (OP-1a) and 1b (OP-1b) as per SMPTE ST 378 [17] and SMPTE ST 391 [18], respectively, shall be used.
MISP-2015.1-13	Motion Imagery, Metadata and Audio shall use the method of Frame-based mapping within the generic container in accordance with SMPTE ST 379-1 [19] and SMPTE ST 381-1 [20].
MISP-2015.1-14	All data constraints for a MXF file shall comply with MISB ST 0301 [21].
MISP-2015.1-15	Although possibly not interpreted, a MXF player shall accept dark (unknown) data.

3.3 Single Image Extraction

An Image extracted from Motion Imagery is no longer Motion Imagery, and therefore, not subject to the MISP. Such extractions could be in JPEG, BMP, JPEG2000 or other Image formats, or directly as a NITF (National Imagery Transmission Format) [22]/NSIF (NATO Secondary Image Format) [23]. Extracting an Image from Motion Imagery into one of these formats should be done with direct conversion and storage using no transitional analog processing steps.

Requirement	
MISP-2015.1-16	Digital Images extracted from Motion Imagery as a NITF (National Imagery Transmission Format)/NSIF (NATO Secondary Imagery Format) shall comply with MIL-STD-2500C [22]/ STANAG 4545 [23] respectively.

3.4 Class Conversion

From the Functional Model, all Motion Imagery is captured by an Imager with a defined native format that falls into one of the Classes of Motion Imagery. In typical applications, use of more than one Class is likely. For instance, an Imager may produce non-compressed High Definition Motion Imagery, which is then processed into Class 1 Motion Imagery for Dissemination.

Figure 8 illustrates common conversions, where Class 0 Motion Imagery may be converted (Processed) to a different Class as needed. For example, the “Embedded” process may be where one or more instances of Class 1 Motion Imagery are inserted into a Class 2 Motion Imagery

data set, such as an array of cameras producing Class 1 Motion Imagery that are stored in a Class 2 Motion Imagery file format. The "Window" process may extract a Class 1 Motion Imagery region-of-interest from Class 2 Motion Imagery, perhaps according to a High Definition format.

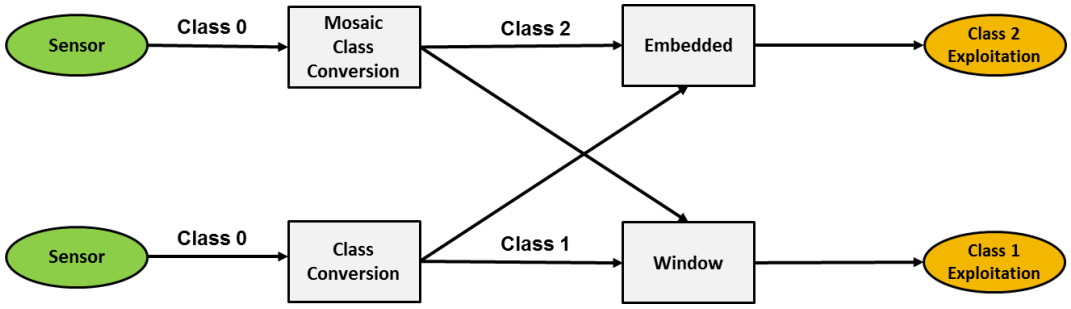

Figure 8: Class 0 Motion Imagery Conversion

When converting Motion Imagery, the Imagery may have its Characteristics changed; for example, converting Class 2 Motion Imagery with a high Pixel Value Range to Class 1 Motion Imagery via Pixel Value Range scaling, or Class 2 Motion Imagery with a high number of Images per Second to Class 1 Motion Imagery via dropping Images.

Regions-of-interest (ROI) from Class 2 Motion Imagery can be converted to Class 1 Motion Imagery with suitable compression (if needed). Guidance for H.264/AVC compression and dissemination from a Class 2 Motion Imagery platform can be found in MISB RP 1011 [24].

3.5 Class 0 Motion Imagery

Class 0 Motion Imagery describes Motion Imagery in its non-compressed form as output by an Imager. Non-compressed Motion Imagery has advantages over compressed Motion Imagery: higher image fidelity with fewer artifacts, which affects feature extraction and other image processing algorithms; fewer prolonged artifacts when an error in the data occurs; and more accurate edits when authoring clips. One disadvantage of non-compressed Motion Imagery is the cost in managing, moving and storing such a large quantity of data.

Processes like noise reduction, stabilization, etc. are oftentimes applied to improve the usability of non-compressed Motion Imagery. Some processes, such as Pixel Value Range scaling used in compressing Infrared Motion Imagery, reduce the detail in the Motion Imagery. Moving analytic operations closer to the Imager *before* compression should be an objective as the SWAP (Size/Weight/Power) of processing systems allow.

3.5.1 Sampling Format

Class 0 Motion Imagery can be produced in a multitude of sampling formats. Many SDO's publish standards that define the sampling format and interface to an Imager. The following sections cite commercial industry standards and state requirements applicable to the Sampling Format of Class 0 Motion Imagery.

Table 3 lists sampling formats for Class 0 Motion Imagery with their respective governing industry standard. The Sampling Format column lists the common industry designation for the format, where the suffix "i" indicates an interlaced-scan format, and "p" a progressive-scan

format. The Native Rate column is the number of Images per Second. The Standard column indicates the governing standard for Sampling Format. The Aspect Ratio column is the SAR, see Section 2.1.4.3. The Color Sampling column references the applicable Color Sampling Model, see Section 2.1.4.2. The Quantization column is the Sample Value Range, see Section 2.1.4.1. Interlaced formats are represented because they are found in legacy systems, and for completeness only.

Table 3: Sampling Formats of Referenced Commercial Standards

Sampling Format	Native Rate (Hz)	Standard	Aspect Ratio (SAR)	Color Sampling	Quantization Bits/sample
525i	29.97	ITU-R BT.601 [25]	4:3, 16:9	4:2:2, 4:4:4	8 or 10 (uniform)
625i	25				
525p	59.94	ITU-R BT.1358 [26]	4:3, 16:9	4:2:2, 4:4:4	8 or 10 (uniform)
625p	50				
720p	60	SMPTE ST 296 [27]	16:9	4:2:2, 4:4:4	8 or 10 (uniform)
	59.94				
	50				
	30				
	29.97				
	25				
1080p	60	SMPTE ST 274 [10]			8, 10 or 12 (uniform)
	59.94				
	50				
	30				
	29.97				
2160p	120, 60, 59.94, 50, 30, 29.97, 25	SMPTE ST 2036-1 [28]	16:9	4:2:2, 4:4:4	10 or 12 (uniform)
4320p					
Note: “i” denotes interlaced scan; “p” denotes progressive scan					

3.5.1.1 Sample Value Range

The Sample Value Range represents the number of bits per Sample to faithfully represent Scene information, and is dependent on both the range (i.e. lowest to highest value) of the information and the resolution (i.e. number of discrete values) needed. For example, the Sample Value Range of a Visible Light Image is typically 8-bits. The Sample Value Range of an Infrared (IR) Image is greater; up to 14 bits. The Sample Value Range becomes a factor in subsequent stages of processing, such as compression where equipment that can only accept 8 bit data is common. In the case of IR, the data must be scaled to fewer bits per Sample. Scaling the Sample Value Range can compromise the integrity of the data. MISB ST 0404 [29] discusses methods for scaling IR data.

3.5.1.2 Pixel Value Range

The Pixel Value Range for Class 0 Motion Imagery is derived by adding the Sample Value Range for all Bands at that Pixel position. For a monochrome Image, such as single-Band IR with a Sample Value Range of 14 bits, the Pixel Value Range is 14 bits. For a three-Band RGB Image with a Sample Value Range of 8 bits per Band, the Pixel Value Range is 24 bits (3 Bands x 8 bits/Band).

When RGB color is transformed into a luminance and chrominance model, the average Pixel Value Range reflects the reduced number of Samples in the chrominance Bands; as discussed in Section 2.1.4.2, where the average Pixel Value Range for 4:2:2 is 16 bits, and for 4:2:0 is 12 bits.

3.5.1.3 Display Aspect Ratio and Pixel Aspect Ratio

Class 0 Motion Imagery includes the common industry-defined sampling formats of Standard Definition (SD), Enhanced Definition (ED), High Definition (HD) and Ultra-High Definition (UHD). SD and ED formats are defined in a 4:3 display aspect ratio (i.e. DAR = 4:3), where the Image has a horizontal to vertical ratio of 4:3. HD and UHD formats specify a 16:9 display aspect ratio (i.e. DAR = 16:9).

In general, SD formats do not have square pixels, while ED is found with both types depending on the Image sampling format. Square pixels (i.e. PAR = 1:1) are a characteristic of the HD and UHD standards, which were designed to be consistent with square-pixel computer displays.

3.5.1.4 Native Data Rate

Appreciating the quantity of data produced by an Imager is an important metric when estimating the degree of compression needed to meet system constraints. The Native data rate of Motion Imagery for a given sampling format is computed as:

Pixels per Image = (Number of Horizontal Pixels) x (Number of Vertical Pixels)

Native Image size (bits) = (Pixels per Image) x (Pixel Value Range)

Native Data Rate (bits/sec) = (Native Image size) x (Number of Images per Second)

Example Native data rates are given in Table 4. Columns Pixels and Row Pixels indicate the Image dimensions. Pixels per Image is computed as the product of the Image dimensions. The Native Image Size is computed as the product of the Pixels per Image and the Pixel Value Range. Finally, Native Data Rate is computed as the product of the Native Image Size and the number of Images/sec. Note that other data, such as Metadata, Audio and Container overhead must be considered in determining the overall data rate.

Table 4: Example Native Data Rates

Column Pixels	Row Pixels	Pixels Per Image	Pixel Value Range (bits)	Native Image Size (MB)	Image Rate (Images/sec)	Native Data Rate (MB/sec)
1280	720	921,600	24 (4:4:4)	2.765	60	165.9
1280	720	921,600	16 (4:2:2)	1.843	60	110.6
1280	720	921,600	12 (4:2:0)	1.382	60	82.9

1920	1080	2,073,600	12 (4:2:0)	3.110	30	93.3

3.5.1.5 Commercial Sampling Formats

The following requirements apply when using the sampling formats for SD, ED, HD and UHD. The standards referenced are those from commercial SDO's.

3.5.1.5.1 Standard Definition

Requirement(s)	
MISP-2015.1-17	Analog Motion Imagery that conforms to NTSC [8] or PAL formats and is converted to digital shall comply with ITU-R BT.601 [25] component (4:2:2).
MISP-2015.1-18	The Motion Imagery sampling format for Standard Definition (SD) Motion Imagery shall be defined by ITU-R BT.601 [25].

3.5.1.5.2 Enhanced Definition

Requirement(s)	
MISP-2015.1-19	The Motion Imagery sampling format for Enhanced Definition (ED) Motion Imagery shall be defined by ITU-R BT.1358 [26].

3.5.1.5.3 High Definition

Requirement(s)	
MISP-2015.1-20	The Motion Imagery sampling format for 1280x720 progressive-scan High Definition (HD) Motion Imagery shall be defined by SMPTE ST 296 [27].
MISP-2015.1-21	The Motion Imagery sampling format for 1920x1080 progressive-scan High Definition (HD) Motion Imagery shall be defined by SMPTE ST 274 [10].

3.5.1.5.4 Ultra High Definition

Requirement	
MISP-2015.1-22	The Motion Imagery sampling structures for 3840x2160 and 7680x4320 progressive-scan Ultra High Definition (UHD) Motion Imagery shall be defined by SMPTE ST 2036-1 [28].

3.5.2 Containers

3.5.2.1 Serial Digital Interface (SDI)

A family of commercial Containers, known as Serial Digital Interface (SDI), has been standardized for the transport of Class 0 Motion Imagery. These standards specify the data format and interface for communication between system components, and the data format for carrying a composition of various data types. Different family members support different data capacities (i.e. SD, ED, HD, etc.). All provide additional data space where non-imagery data can be inserted. Audio, when present, is carried in the Horizontal Ancillary Space (HANC). Metadata is carried in the Vertical Ancillary Space (VANC), but may be carried in one of the available audio channels in the HANC after the VANC is exhausted. Data is mapped into the HANC and VANC as indicated in SMPTE ST 291 [30], which specifies the mapping of Ancillary (ANC) data into the HANC or VANC.

Table 5 lists the SDI standards along with their characteristics. The industry designator for a particular SDI Container is listed in the "Container" column. Together, the Format and Frame Rate indicates the sampling format the Container can support. The governing standard for each Container is listed in the Standard column. Aspect Ratio specifies the Image aspect ratio (i.e. the SAR) supported by each Standard.

Table 5: SMPTE Standards for Motion Imagery Transport

Container	Format	Frame Rate	Standard	Aspect Ratio
SD-SDI*	525i*	29.97	ST 259 [31]	4:3, 16:9
	625i*	25		
ED-SDI	525p	59.94	ST 292-1 [32], ST 349 [33]	4:3, 16:9
	625p	50		
HD-SDI	720p	60	ST 292-1 [32]	16:9
		59.94		
		50		
		30		
		29.97		
		25		
	1080p	30		
		29.97		
		25		
3G-SDI	1080p	60	ST 424 [34]	16:9
		59.94		
		50		
10G-SDI	2160p	60	ST 435-2 [35]	16:9
	4320p			
*Interlaced formats are not allowed in new implementations.				

Figure 9 pictorially shows the family of SDI Containers of Table 5 along with corresponding supporting standards that define how Motion Imagery, Audio and Metadata for each are formatted. The SDI standards were designed hierarchically, where higher capacity transports support increased pixel density and frame rate, also support the lower capacity formats. This allows one transport to support lower capacity formats.

Standards SMPTE ST 355 [36], SMPTE ST 337 [37] and SMPTE ST 339 [38] support the formatting of digital audio and data into the AES3 [39] format, while SMPTE ST 299-1 [40] and SMPTE ST 299-2 [41] define the mapping from AES3 into HD-SDI and 3G-SDI formats respectively.

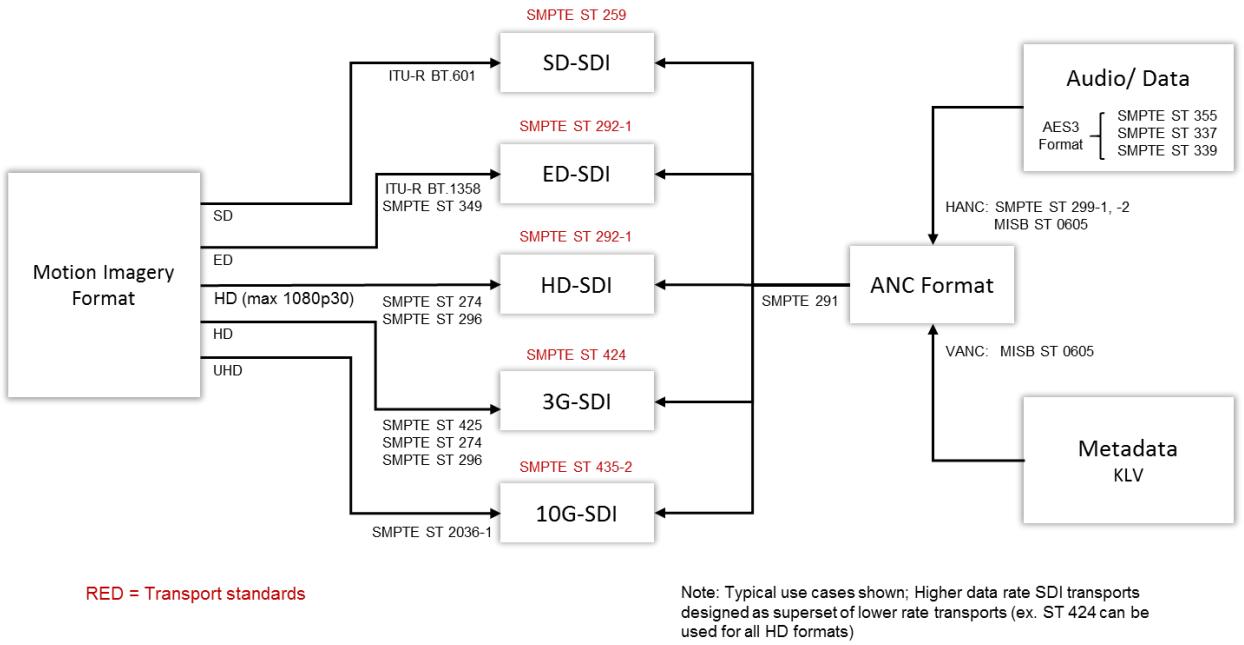

Figure 9: Family of SDI Containers and Format Standards

The following requirements identify the SDI Container and data format standard for various Motion Imagery formats:

Requirement(s)	
MISP-2015.1-23	The Container format for Standard Definition (SD) Class 0 Motion Imagery for source aspect ratios of 4:3 and 16:9 shall be defined by SMPTE ST 259 [31] Levels C and D respectively.
MISP-2015.1-24	The Container format for Enhanced Definition (ED) 525- and 625-line Class 0 Motion Imagery over SMPTE ST 292-1 [32] shall be defined by SMPTE ST 349 [33].
MISP-2015.1-25	The Container format for High Definition (HD) Class 0 Motion Imagery up to 1080p at 60 frames per second shall be defined by SMPTE ST 424 [34]. The Container format for High Definition Class 0 Motion Imagery up to 1080p at 30 frames per second may use SMPTE ST 292-1 [32].
MISP-2015.1-26	The Container format for High Definition (HD) Class 0 Motion Imagery up to 1080p at 60 frames per second shall be defined by SMPTE ST 424 with signal mapping specified in SMPTE ST 425 [42].
MISP-2015.1-27	The Container format for Ultra High Definition (UHD) Class 0 Motion Imagery shall be defined by SMPTE ST 435-2 with signal mapping specified in SMPTE ST 2036-3 [43].
MISP-2015.1-28	The mapping of digital infrared Class 0 Motion Imagery into a SMPTE ST 292-1 [32] interface shall be defined by MISB ST 0403 [44].

In addition to choice of a particular SDI container, the MISP further stipulates the placement of a time stamp, Metadata and Audio within the VANC and HANC.

3.5.2.1.1 Timestamps

The following requirement applies to the insertion of a time stamp into the VANC of a Serial Digital Interface (SDI) Container.

Requirement	
MISP-2015.1-29	Class 0 Motion Imagery carried by a SMPTE ST 292-1 [32] or SMPTE ST 424 [34] Container shall contain a Precision Time Stamp in accordance with MISB ST 0605 [45].

3.5.2.1.2 Metadata

The following requirement applies to Metadata inserted into the VANC and HANC of a Serial Digital Interface (SDI) Container.

Requirement	
MISP-2015.1-30	Class 0 Motion Imagery Metadata inserted into SMPTE ST 292-1 [32] or SMPTE ST 424 [34] shall comply with MISB ST 0605 [45].

3.5.2.1.3 Audio

The following requirement allocates one Audio channel inserted into the HANC of a Serial Digital Interface (SDI) Container for mission Audio.

Requirement	
MISP-2015.1-31	One AES3 Audio channel (one stereo pair) encoded in accordance with SMPTE ST 291 [30] and inserted into the Horizontal Ancillary Space (HANC) of a Serial Digital Interface (SDI) shall be reserved for mission Audio (narration, etc.).

3.6 Class 1 Motion Imagery

Class 1 Motion Imagery represents compressed Motion Imagery, Metadata and compressed Audio encapsulated in a MPEG-2 Transport Stream Container.

3.6.1 Sampling Format

To further interoperability and data reuse, a number of Class 1 Motion Imagery Sampling Formats are defined, which span the most commonly used Sampling Formats. These Sampling Formats, listed in Table 6, are called Points of Interoperability (POI).

In Table 6, the Quality Level places a subjective rating on the compressed Motion Imagery to a data rate commensurate with that in the MPEG-2 TS Data Rate column. The MPEG-2 TS Data Rate approximates the overall data rate based on the compressed Motion Imagery and the overhead of the MPEG-2 TS Container. Note that the Data Rate values assume a 4:2:0 color model (see Section 2.1.4.2). The Sampling Format specifies both the number of Pixels in an Image (Columns x Rows) and the number of Images per second (Images per second). The Source Aspect Ratio indicates a particular ratio for the given Sampling Format. The H.264 Level (discussed in Section 3.6.3) column indicates the minimum Level within the H.264 specification that supports the Sampling Format at the MPEG-2 TS Data Rate.

Table 6: Exemplar Points of Interoperability

Quality Level	MPEG-2 TS Data Rate* Mbps	Sampling Format		Source Aspect Ratio	H.264 Level (minimum)
		Columns x Rows	Images per second		
Very High	5 - 10	1920 x 1080	<= 30	16:9	4.1
		1280 x 720	<= 60	16:9	3.2
High	1.5 - 5	1920 x 1080	<= 10	16:9	4
		1280 x 720	<= 30	16:9	3.2
		960 x 540	<= 60	16:9	3.2
		640 x 480	<= 60	4:3	3.1
		640 x 360	<= 60	16:9	3.1
		480 x 270	<= 60	16:9	3
		320 x 240	<= 60	4:3	3
		320 x 180	<= 60	16:9	2.1
Medium	0.768 – 1.5	1920 x 1080	<= 3	16:9	4
		1280 x 720	<= 7	16:9	3.1
		960 x 540	<= 15	16:9	3.1
		640 x 480	<= 15	4:3	2.2
		640 x 360	<= 15	16:9	2.2
		480 x 270	<= 30	16:9	2.1
		320 x 240	<= 30	4:3	2
		320 x 180	<= 30	16:9	2
Low	0.128 – 0.768	1280 x 720	<= 2	16:9	3.1
		960 x 540	<= 7	16:9	3.1
		640 x 480	<= 10	4:3	2.2
		640 x 360	<= 10	16:9	2.2
		480 x 270	<= 10	16:9	2.1
		320 x 240	<= 10	4:3	1.3
		320 x 180	<= 10	16:9	1.3
SA	< 0.128	320 x 240	<= 5	4:3	1.2
		320 x 180	<= 5	16:9	1.2
		160 x 120	<= 15	4:3	1.2
*Note: Data Rate based on 4:2:0 color model; assumes no B-frames.					

3.6.2 Pixel Value Range

Class 1 Motion Imagery is typically composed of three (i.e. RGB) Bands for Visible Light, and one Band for Infrared (i.e. monochrome) Imagers. Each Band has a maximum Pixel Value Range of eight bits. Several types of color models are used: 4:2:2 and 4:2:0 – these were discussed in Section 2.1.4.2. Although there is perceptual color loss in these color models, they are used to further reduce the quantity of data to be compressed. Although not shown in Table 6, the color model is assumed to be 4:2:0, which is very common when seeking high compression ratios. Systems that produce 4:2:2 color sampling will need to adjust the Data Rate values accordingly.

3.6.3 Compression

3.6.3.1 General

The MISP approves two compression technologies for Class 1 Motion Imagery: H.264/AVC [46] and MPEG-2 [47]. H.264/AVC is displacing MPEG-2 as a preferred compression technology because of its nearly 2:1 coding efficiency over MPEG-2; this means a 50% reduction in data rate for a given level of image quality, or higher image quality at the same data rate. The MISP recommends that systems produce H.264/AVC. Table 6 only identifies H.264/AVC, because it offers the best compromise in image quality for a given data rate.

The "H.264 Level" column in Table 6 corresponds to the Level specified in the H.264/AVC standard [46] that supports the compression of Motion Imagery for the particular Sampling Format listed. A Level as defined in the H.264 standard is "*a specified set of constraints imposed on values of the syntax elements in the bit-stream. These constraints may be simple limits on values. Alternatively they may take the form of constraints on arithmetic combinations of values (e.g., picture width multiplied by picture height multiplied by number of pictures decoded per second).*"

In addition to Levels (and for completeness), the H.264/AVC standard defines a H.264 Profile as "*a subset of the entire bit-stream syntax that is specified by this Recommendation | International Standard.*" Different Profiles are used in different applications. For example, H.264/AVC specifies thirteen Profiles; common ones include Baseline, Constrained Baseline, Main and High. Further information on choices in Profiles and Levels can be found in MISB RP 0802 [48]. Consult MISB TRM 1404 [6] for further information on H.264/AVC compression including Profiles, Levels and application-specific uses.

Requirement(s)	
MISP-2015.1-32	Class 1 Motion Imagery compressed using H.264/AVC [46] shall comply with ITU-T Rec. H.264 [46].
MISP-2015.1-33	Class 1 Motion Imagery compressed using H.264/AVC [46] shall use Baseline, Main or High Profile.
MISP-2015.1-34	Class 1 Motion Imagery compressed using MPEG-2 [47] shall comply with ISO/IEC 13818-2 [47].
MISP-2015.1-35	Class 1 Motion Imagery compressed using MPEG-2 [47] shall use Main or High Profile.

It is mandatory that a MISP compliant Encoder support the Points of Interoperability within their own H.264/AVC Level. To facilitate MISP compliance testing, at least one POI is required to be supported.

Requirement	
MISP-2015.1-36	At least one Point of Interoperability (POI) (Table 6) shall be supported by a Class 1 Motion Imagery [H.264/AVC] Encoder.

3.6.3.2 Infrared

Infrared Motion Imagery may have a Pixel Value Range that exceeds the limits of Class 1 Motion Imagery. MISB ST 0404 [29] provides guidance and recommendations in applying several types of mapping for reducing the Pixel Value Range to meet the limits of Class 1 Motion Imagery.

Requirement	
MISP-2015.1-37	When Infrared Motion Imagery with a Pixel Value Range greater than 8 bits is converted into Class 1 Motion Imagery and compressed using MPEG-2 [47] or H.264/AVC [46] it shall comply with MISB ST 0404 [29].

3.6.4 Decompression

Decoders that comply with H.264/AVC and MPEG-2 compression must operate at a particular Profile and Level (Profile and Level for H.264 discussed in Section 3.6.3). A Decoder cannot claim compliance to a Profile and only partially support the bit-stream syntax of that Profile. Likewise, a decoder cannot claim compliance to a Level and only partially support the constraints on values of the syntax elements in the bit-stream of that Level. Compliance requirements for Decoders encompass a broader class of bit-streams than those for Encoders.

For example, an Encoder compliant to a particular H.264/AVC Profile and Level need only produce one bit-stream compliant to that Profile and Level; a compliant Decoder, however, must be able to decode *all* bit-streams compliant to their Profile and Level. As discussed in Section 3.6.3, the Points of Interoperability shown in Table 6 apply to H.264/AVC compressed bit-streams. For an Encoder that produces a H.264/AVC Level 3.2 bit-stream, a Decoder must be able to decode that same H.264/AVC Level 3.2 bit-stream. In addition, that Decoder must be able to decode all bit-streams produced by Encoders below Level 3.2 (i.e. Level 3.1, 3.0, etc.).

In Table 7, POI's are given for Legacy systems. These systems typically produce compressed Motion Imagery using Sampling Formats that may be interlaced-scan, Standard Definition, and derivative formats compressed with either H.264/AVC or MPEG-2 compression. As MPEG-2 is being displaced by H.264/AVC, this information is provided more as a point of reference for Decoders that may need to support existing Legacy systems.

The Quality Level column in Table 7 indicates a subjective rating on expected image quality when meeting values within the Transport Stream Data Rate column for the two compression types. Note that a color sampling model of 4:2:0 is assumed in computing Data Rate. In the Sampling Format column, a number of formats are listed. Although interlaced-scan formats are not permitted, the 720x480 and 640x480 Sampling Formats are common commercial interlaced-scan formats found in legacy systems. The corresponding Frames per Second range of 24-30

reflect this. The designation “integers in range” means that except for those fractional Frames per Second values listed, only integer values are allowed.

H.264/AVC Levels and MPEG-2 Profiles and Levels supporting a particular Sampling Format are indicated in the H.264 Level and MPEG-2 columns respectively. MPEG-2 Profiles and Levels carry different designations than H.264/AVC. The MPEG-2 compression standard [47] identifies five Profiles, with Main Profile (MP) and High Profile (HP) the most common. The coding in MPEG-2 is described as a combination of Profile and Level as Profile@Level. For example, MPEG-2 MP@HL means MPEG-2 compression using Main Profile and High Level.

Table 7: Exemplar Points of Interoperability for Legacy Systems

Quality Level	Codec	MPEG-2 TS Data Rate* Mbps	Sampling Format		H.264 Level (minimum)	MPEG-2
			Columns x Rows	Frames per Second		
High	MPEG-2	>2	720 x 480 640 x 480	24 – 30 (integers in range) 29.97	-	MP@ML
	H.264	>1			3	-
Medium	MPEG-2	1.5 -3	720 x 480 640 x 480	10 – 30 (integers in range) 29.97, 29.97/2, 29.97/3	-	MP@ML
	H.264	0.768 – 1.5			3	-
Low	MPEG-2	0.256 – 1.5	640 x 480 352 x 240 320 x 240	1 – 30 (integers in range) 29.97, 29.97/2, 29.97/3	-	MP@ML
	H.264	0.128 – 0.768			2	-
SA	H.264	< 0.128	352 x 240 320 x 240 176 x 120 160 x 120	1 – 15 (integers in range) 29.97, 29.97/2, 29.97/3	1.2	-
*Note: Data Rate based on 4:2:0 color model; assumes no B-Frames.						

A MISP compliant Decoder needs to decode either H.264/AVC or MPEG-2 at the H.264 Level and MPEG-2 Profile/Level designated for that specific Sampling Format, and in addition, support the decoding of all Levels below that Level. Systems that use non-compliant Decoders may be able to support one or more of the Points of Interoperability, thus enabling some measure of interoperability with MISP compliant systems.

Requirement(s)	
MISP-2015.1-38	A Class 1 Motion Imagery Decoder shall support the decoding of Class 1 Motion Imagery compressed using MPEG-2 [47] Main Profile at Main and High Level.
MISP-2015.1-39	A Class 1 Motion Imagery Decoder for MPEG-2 shall fully meet the compliance requirements of ISO/IEC 13818-2 [47] per Profile and Level.

MISP-2015.1-40	A Class 1 Motion Imagery Decoder shall support the decoding of Class 1 Motion Imagery compressed using H.264/AVC [46] Baseline Profile, Main Profile and High Profile up to and including Level 4.1.
MISP-2015.1-41	A Class 1 Motion Imagery Decoder for H.264/AVC shall fully meet the compliance requirements of ISO/IEC 14496-10 [46] per Profile and Level.

3.6.5 Annotations

Not all decoders support annotations. The MISB provides guidance for adding annotations in a non-destructive manner to Motion Imagery (i.e. original Image Pixels are not overwritten by the information). MISB ST 0602 provides direction on the creation of "Annotation" KLV metadata to allow for the creation, dissemination, and display of visual cues to enhance the exploitation of Motion Imagery Data. The following requirement applies to a Decoder that supports annotations.

Requirement	
MISP-2015.1-42	A Class 1 Motion Imagery Decoder that supports graphic overlay shall comply with MISB ST 0602 [49].

3.6.6 Time Stamps

A Precision Time Stamp, defined in MISB ST 0603 [11], is mandatory in Class 1 Motion Imagery within each Image independent of the Metadata. Both H.264/AVC and MPEG-2 define specific locations in their respective compressed bit-streams for this information. MISB ST 0604 [50] provides guidance on which fields in the bit-streams to insert the Precision Time Stamp, as well as, a defined format for the information.

Requirement(s)	
MISP-2015.1-43	Class 1 Motion Imagery compressed using H.264/AVC [46] shall contain a Precision Time Stamp in accordance with MISB ST 0604 [50].
MISP-2015.1-44	Class 1 Motion Imagery compressed using MPEG-2 [47] shall contain a Precision Time Stamp in accordance with MISB ST 0604 [50].

3.6.7 Metadata

As Class 1 Motion Imagery is intended to meet constrained bit rate criteria, adding extra data such as Metadata and/or Audio can reduce the bit-space available for the Imagery, hence potentially reducing the quality of the Motion Imagery. For this reason, Metadata accompanying Class 1 Motion Imagery is encoded using Key Length Value (KLV), which is an extremely bit-efficient method for conveying information.

Requirement	
MISP-2015.1-45	Class 1 Motion Imagery Metadata shall be represented using KLV (Key Length Value).

MISB RP 0701 [51] defines the Structure of the Common Metadata System (CMS), describes how to organize the sensor/platform data into a hierarchy of KLV Packs and Local Sets that reduces the bandwidth needed to transmit the data, and defines the required data elements.

3.6.8 Audio

The MISB has approved several compressed audio formats (see MISB ST 1001 [52]) intended to facilitate the interoperable use of Audio.

Requirement	
MISP-2015.1-46	Class 1 Motion Imagery compressed Audio shall comply with MISB ST 1001 [52].

3.6.9 Containers

The following subsections specify the requirements for the container type and structure for Class 1 Motion Imagery.

3.6.9.1 MPEG-2 Transport Stream

The MPEG-2 Transport Stream (TS) Container [53] provides for the carriage of Motion Imagery, Metadata and Audio as a unified package, as shown in Figure 10. Internal timing signatures for the Motion Imagery, Metadata (when in the synchronous channel), and Audio enable the data to retain relationships for presentation at the display. Additional information on constructing a MPEG-2 Transport Stream that complies with the MISP is found in MISB TRM 0909 [54].

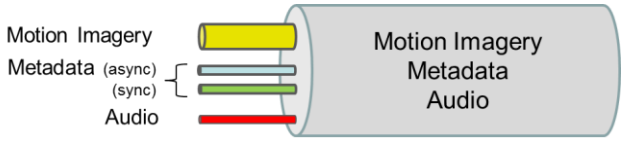

Figure 10: MPEG-2 Transport Stream Container

The use of the MPEG-2 TS is further profiled by MISB standards, which are reflected in the following requirements.

Requirement(s)	
MISP-2015.1-47	Class 1 Motion Imagery encapsulated in a MPEG-2 Transport Stream Container shall comply with ISO/IEC 13818-1 [53] (a.k.a. ITU-T Rec H.222.0 [55]).
MISP-2015.1-48	Class 1 Motion Imagery encapsulated in a MPEG-2 Transport Stream Container shall comply with MISB ST 1402 [56].
MISP-2015.1-49	Security metadata encapsulated in a MPEG-2 Transport Stream Container shall be inserted into only one of the two carriage mechanisms available: the Synchronous Stream Multiplex Method or the Asynchronous Stream Multiplex Method in accordance with MISB ST 1402 [56].
MISP-2015.1-50	Class 1 Motion Imagery encapsulated in a MPEG-2 Transport Stream Container shall meet the compliance requirements of ISO/IEC 13818-4 [57].

3.7 Class 2 Motion Imagery

Class 2 Motion Imagery represents Motion Imagery, where one or more of the Image Characteristics (see Section 2.1.4.1) exceeds the limits of the Class 1 Motion Imagery, and the Motion Imagery is compressed. Such examples include Large Volume Motion Imagery (LVMI), where Images may be formed using a variety of Image geometries ranging from a single Image to a matrix of individual Images composited into one complete single Image.

Figure 11 illustrates a 2x2 array, four-camera, multi-Image Imager that produces one complete Image. Any Imager geometry may be used (linear, larger array, etc.).

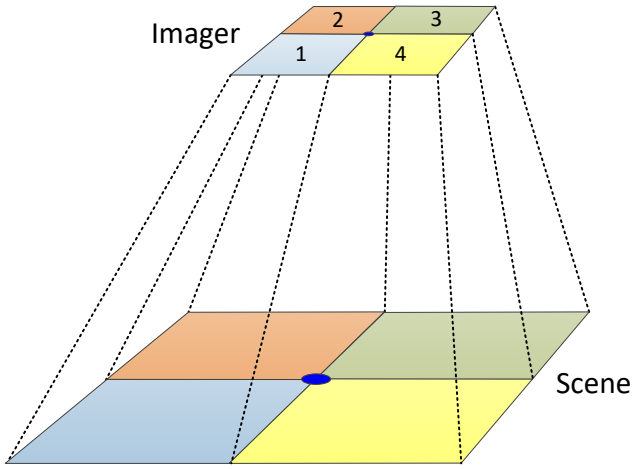

Figure 11: Illustration of 2x2 Image Geometry

Large Volume Motion Imagery is characterized by large datasets. Because of the quantity of data collected per Image and/or collected over extended time intervals, the large data-handling requirements, such as storage and dissemination, incur significant costs. LVMI systems may operate at Image rates outside the bounds of Class 1 Motion Imagery, which further contributes to dissemination and exploitation issues.

Another Class 2 Motion Imagery application is Scientific/Engineering Motion Imagery (SEMI), where for example the Motion Imagery Sample Value Range may be more than 10 bits per Band, there may be more than three color/spectral Bands, or the Images per second may be in the hundreds or thousands. There may also be a need for "perceptually lossless" compression, where the Motion Imagery is compressed at a high bit rate.

3.7.1 Sampling Format

Class 2 Motion Imagery may have characteristics, such as Sample Value Range, Pixel Value Range, Image size, Image Aspect ratio, Bands per Image and Number of Images per second representative of Class 0 Motion Imagery, but are outside those of Class 1 Motion Imagery.

3.7.1.1 Pixel Value Range

The Pixel Value Range for Class 2 Motion Imagery is commonly specified to 16 bits although some applications use up to 32 bits.

3.7.1.2 Image Size and Aspect Ratios

The Image Size of Class 2 Motion Imagery and its Aspect Ratio can vary greatly. For example, a linear array of three 1920x1080 HD cameras could create a single Image with 5760 Columns and 1080 Rows resulting in a 16:3 Aspect Ratio.

3.7.1.3 Bands

Class 2 Motion Imagery may have any number of Bands depending on their intended spectral coverage. For example, a Hyperspectral (HSI) Image could require 50 bands.

3.7.1.4 Number of Images per Second

Class 2 Motion Imagery may have any number of Images per Second depending on the application.

3.7.2 Compression

The MISB recommends JPEG2000 [58] and H.264/AVC [46] compression for Class 2 Motion Imagery. JPEG2000 is typically used when compressing the LVMI datasets. JPEG2000 also finds use in other Class 2 Motion Imagery applications, where high compression ratios are not required and other technologies like H.264/AVC are not appropriate.

3.7.2.1 General

JPEG2000 compression can be implemented using different profiles. To maximize interoperability across Class 2 Motion Imagery systems that use JPEG2000, the following requirement ensures a specific profile is used.

Requirement	
MISP-2015.1-51	Class 2 Motion Imagery compressed using JPEG2000 shall comply with ISO/IEC BIFF Profile BPJ2K [58].

In applications where the Motion Imagery has a Pixel Value Range that exceeds that of Class 1 Motion Imagery, H.264/AVC can accommodate a Pixel Value Range up to 14 bits using more advanced Profiles of H.264/AVC. Users should be aware that these Profiles of H.264/AVC are not commonly used, and special decoders will be needed.

Requirement(s)	
MISP-2015.1-52	Class 2 Motion Imagery compressed with H.264/AVC [46] shall use High 4:2:2 Profile (Hi422P) or High 4:4:4 Predictive Profile (Hi444PP).
MISP-2015.1-53	Infrared Class 2 Motion Imagery compressed with H.264/AVC [46] shall comply with MISB ST 0404 [29].

3.7.3 Decompression

Requirement(s)	
MISP-2015.1-54	A Class 2 Motion Imagery Decoder for JPEG2000 shall meet the compliance requirements of ISO/IEC 15444-4 [59].
MISP-2015.1-55	A Class 2 Motion Imagery Decoder for H.264/AVC shall support the decoding of High 4:2:2 Profile (Hi422P) and High 4:4:4 Predictive Profile (Hi444PP) up to and including Level 4.2.
MISP-2015.1-56	A Class 2 Motion Imagery Decoder for H.264/AVC shall fully meet the compliance requirements of ISO/IEC 14496-10 [46] per Profile and Level.

3.7.4 Annotations

The use of Annotations for Class 2 Motion Imagery encapsulated within a MPEG-2 Transport Stream is mandated by the same requirements for Class 1 Motion Imagery (see Section 3.6.5).

The use of Annotations for Class 2 Motion Imagery encapsulated within a Motion Imagery Extension for NITF (MIE4NITF [60]) Container is governed by MIL-STD-2500C [22]/STANAG 4545 [23].

3.7.5 Time Stamps

The insertion of a Time Stamp into Class 2 Motion Imagery compressed using H.264/AVC [46] is mandated by the same requirements for Class 1 Motion Imagery (see Section 3.6.6).

The insertion of a Time Stamp into Class 2 Motion Imagery encapsulated within a MIE4NITF Container is governed by requirements inside the MIE4NITF [60] specification.

3.7.6 Metadata

When encapsulating Class 2 Motion Imagery and Metadata into a MPEG2 Transport Stream, the Class 1 Motion Imagery Metadata standards and requirements apply.

When encapsulating Class 2 Motion Imagery and Metadata within a MIE4NITF [60] Container, the requirements for Metadata are defined by MIL-STD-2500C [22]/STANAG 4545 [23] and/or program implementation-specific profiles.

3.7.7 Audio

The use of Audio for Class 2 Motion Imagery encapsulated within a MPEG-2 Transport Stream is mandated by the same requirements for Class 1 Motion Imagery (see Section 3.5.2.1.3).

3.7.8 Containers

3.7.8.1 MPEG-2 Transport Stream

The use of the MPEG-2 TS as a Container for H.264/AVC compressed Class 2 Motion Imagery is mandated by the same requirements for Class 1 Motion Imagery (see Section 3.6.9.1).

3.7.8.2 MIE4NITF

The MIE4NITF [60] Container is an extension to MIL-STD-2500C [22]/STANAG 4545 [23] for Class 2 Motion Imagery applications that require spatial blocking, greater than three spectral bands, greater than 10 bit Pixel Value Range, etc., such as Large Volume Motion Imagery and Scientific/Engineering Motion Imagery.

Requirement	
MISP-2015.1-57	Class 2 Motion Imagery placed into a NITF (National Imagery Transmission Format [22])/NSIF (NATO Secondary Imagery Format [23]) shall comply with MIE4NITF [60].

3.8 Class 3 Motion Imagery

Class 3 Motion Imagery applies to Motion Imagery Systems that produce content outside the MISP ecosystem of standards and requirements. Class 3 Motion Imagery includes those sources external to the MISB community, typified by content from cell phones, mobile devices, surveillance cameras, and other industrial cameras. These sources of content may come in various compressed video/audio Formats and Containers that may not comply with the MISP. As these sources represent potentially useful information, it is beneficial to reformat the content to MISP requirements for use by current Exploitation tools.

3.8.1 Motion Imagery Data Normalization

Content normalization is the process of transforming Class 3 Motion Imagery to comply with MISP standards and requirements. These issues include:

- Non-supported Motion Imagery compression
- Lack of or insufficient Metadata (i.e. none or time and location only)
- Non-supported Metadata encodings
- Non-supported Audio compression
- Non-supported Container

The following process (shown in Figure 12) normalizes content to MISP Standards:

- Store the original source content (if warranted)
- Remove all content from its Container
- Decompress and compress data to comply with the MISP formats (if necessary)
- Insert a time stamp into the Motion Imagery
- Add metadata to include: source ID, time stamp, location information
- Put into an MISP approved Container (i.e. MPEG-2 TS, etc.)

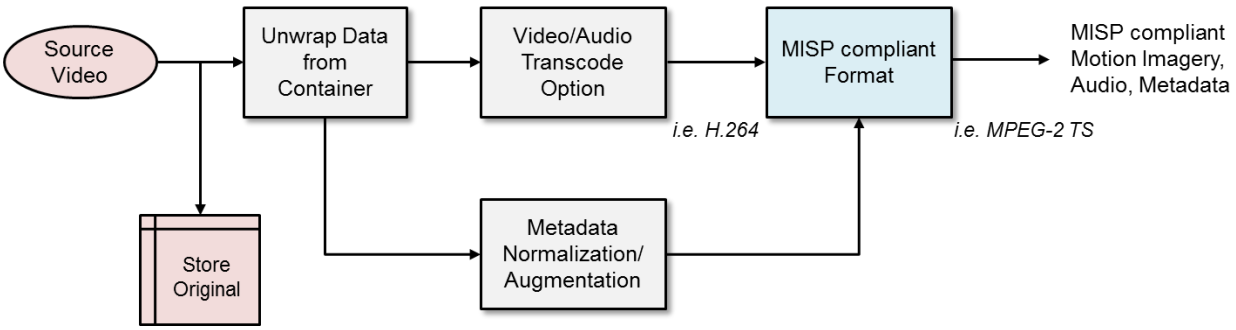

Figure 12: Motion Imagery Data Normalization

The following requirements ensure non-compliant MISP Motion Imagery, Metadata and Audio are normalized for Exploitation purposes.

Requirement(s)	
MISP-2015.1-58	Class 3 Motion Imagery shall be compressed using H.264/AVC [46] or MPEG-2 [47].
MISP-2015.1-59	When time stamp information is available in Class 3 Motion Imagery, it shall be converted to a Precision Time Stamp according to MISB ST 0603 [11].
MISP-2015.1-60	When a Precision Time Stamp is generated from Class 3 Motion Imagery, it shall be inserted into a H.264/AVC or MPEG-2 compressed elementary stream in accordance with MISB ST 0604 [50].
MISP-2015.1-61	When time stamp information is available in Class 3 Motion Imagery and after conversion to a Precision Time Stamp according to MISB ST 0603 [11], it shall be inserted as Metadata according to MISB ST 0601 [61].
MISP-2015.1-62	When location information is available in Class 3 Motion Imagery, it shall be inserted as Metadata according to MISB ST 0601 [61].
MISP-2015.1-63	When converting Class 3 Motion Imagery to meet MISP requirements, a Minor Core Identifier shall be generated and inserted according to MISB ST 1204.1 [62].
MISP-2015.1-64	Class 3 Motion Imagery Audio shall be compressed according to MISB ST 1001 [52].
MISP-2015.1-65	When converting Class 3 Motion Imagery to meet MISP requirements, the mandatory security metadata elements from MISB ST 0102 [63] shall be included.
MISP-2015.1-66	When converting Class 3 Motion Imagery to meet MISP requirements, it shall be encapsulated in a MISP approved Container.

4 CONTENT

4.1 Introduction

This section provides requirements for the Content that maps to the Structure presented in Section 3. The Content is comprised of three types: the **Motion Imagery, Audio** and the **Metadata**. The **Motion Imagery** is the visual information exploited by analysts. The types of Content represented in Motion Imagery are vast and dependent on the Scene type, sensor position, modality and other factors. While it's difficult to levy requirements on the scene content, the MISP does provide standards about the quality of the Motion Imagery.

The **Audio** is optional Content included with the Motion Imagery. The source of the Audio can be from the sensor itself, or added to the Motion Imagery after initial capture downstream in Exploitation.

Metadata provides the information for Contextual Interpretability (see Section 2.1.2). Motion Imagery by itself has limited intelligence value without Context. Providing as much Context information about the Motion Imagery both when collected, and later in Exploitation, greatly increases its Intelligence and Tactical value. While structures built on standards and requirements ensure a common framework for data sharing and analysis, the Content placed into those structures is most important for Exploitation. The quality of the Metadata – both its availability and accuracy - is critical. Ongoing improvement in data collection is continuous and must be a primary focus within the community of practice.

4.2 Motion Imagery - Content

Motion Imagery Content is assessed by measuring and monitoring Motion Imagery Quality. Motion Imagery Quality can be affected by the atmosphere, optics, compression, delivery methods and other factors on its way to Exploitation; Motion Imagery Quality is fully discussed in [5]. The goal is to produce the highest quality Motion Imagery content, then maintain the quality of the content; this begins first with the Motion Imagery itself and how it is managed throughout the process of capture, delivery and display. To monitor Motion Imagery Quality, Metadata in the Quality Domain (see Section 4.4.2.7) is used.

Displaying text and graphics over Motion Imagery provides a visual aid for some users, however for other users and automated systems the graphics need to be removed to properly exploit the Motion Imagery; the following requirement addresses this issue.

Requirement	
MISP-2015.1-67	Graphic and text information overlaid onto Motion Imagery shall be nondestructive to the Motion Imagery content (i.e. "burned-in metadata" is not allowed).

4.3 Audio Content

At this time the MISP does not provide standards for Audio Content other than the Quality Loss discussion in MISB ST 1001 [52].

4.4 Metadata Content

There are a large number of Metadata elements used to provide Contextual Interpretability and other important information for Motion Imagery. The Metadata elements are organized into groups called **Domains**. Applications will draw from several of these Domains to meet their requirements; a group of Domains used to support an application is called a **Collection**.

Metadata can be represented using different types of encodings, and the type can be different within a class of Motion Imagery. For example, Class 0 Motion Imagery defines requirements for encoding Metadata using KLV. However, alternate Metadata encodings may be added in the future to support Class 0 Motion Imagery. Class 1 Motion Imagery exclusively mandates that all Metadata be encoded using KLV. The encoding of Metadata for Class 2 Motion Imagery depends on the Container. When Class 2 Motion Imagery is encapsulated in MPEG-2 Transport Stream and MXF, for example, Metadata is encoded as KLV, whereas when encapsulated in MIE4NITF Metadata is encoded as Tagged Record Extensions.

4.4.1 Domains and Collections Overview

Domains are Metadata elements related around a central topic. For example, the Temporal Domain is a group of information about time; it includes absolute time, relative time, temporal accuracies, time sources, lock states, etc. A particular application may only use one element of the Domain, for example, absolute time, where other applications may use them all. Domains may have requirements associated with them; therefore, when a Domain is used certain Metadata elements may be mandatory. Domains may have different requirements based on the Class of the Motion Imagery. Domains can be related to other Domains; the relationship can be hierarchical or singular dependency (i.e. a graph). Examples of Domains (in alphabetical order) are: Administrative, Combat, Exploitation, Image Space, Infrared (IR), Platforms (Aeronautical, Ground, Marine, etc.), Quality, and Synthetic Aperture Radar (SAR), Temporal, Visual Light and others. Domains are intended to be topic driven; however, the goal is to keep the size of the Domain (i.e. the number of metadata elements) as small as possible. When a Domain becomes too large, it will be broken into a number of smaller domains, if possible.

Collections are associations of Domains, along with some usage rules, for a specific application. For example, MISB ST 0601 - UAS Data link Local Metadata Set is a Collection of Metadata from several Domains as shown in Figure 13.

Domains are reused in different Collections, so they are essential in providing consistency among different Collections, and therefore, interoperability between systems.

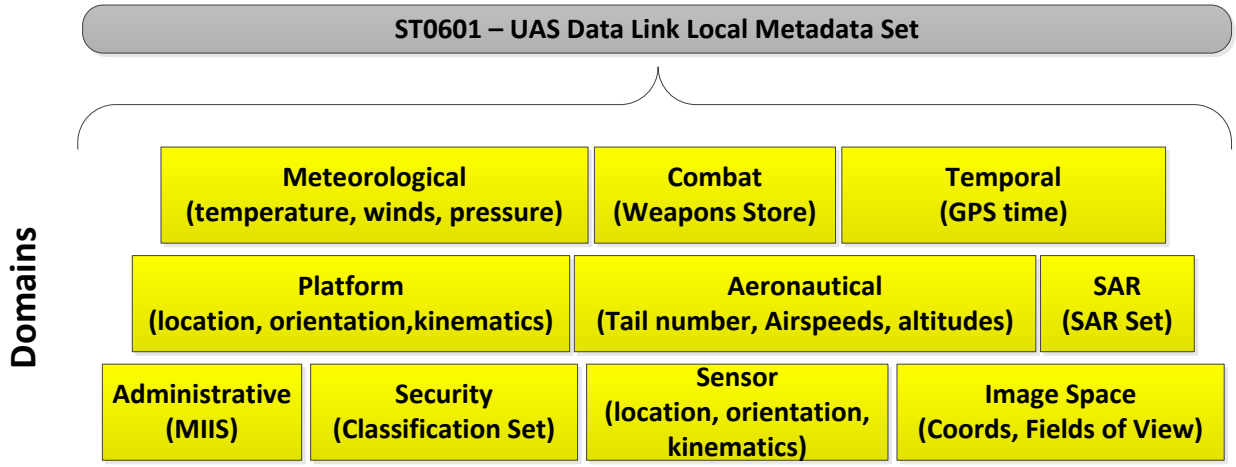

Figure 13: Example of a Collection (MISB ST 0601)

4.4.2 Metadata Domains

Prior to MISP-2015, Domains and Collections were not used to organize Metadata; however, as Domains mature to meet new capabilities, this organization will improve reusability and document clarity. The following sections describe some of the Domains (in alphabetical order) from existing Metadata sets; the remaining Domains are not discussed in this version of the MISP.

4.4.2.1 Administrative Domain

The Administrative Domain provides general Metadata about the use and the management of Motion Imagery Data. An essential component of the Administrative Domain is the ability to properly identify Motion Imagery. Motion Imagery is generated by many different sensors, distributed across many different networks, and received by many different users and systems. To coordinate analysis, manage and generally prevent confusion with such a large number of Motion Imagery sources, it is important to define a consistent name or identity for each source. For Class 0 Motion Imagery and Class 1 Motion Imagery, the Motion Imagery Identification System (MIIS) (MISB ST 1204 [62]) defines a mandatory consistent unique identifier for all sensors and platforms, while MISB ST 1301 [64] defines augmentation identifiers.

Requirement(s)	
MISP-2015.1-68	Motion Imagery shall contain a Core Identifier in accordance with MISB ST 1204 [62].
MISP-2015.1-69	Supplemental identifiers to be used with MISB ST 1204 [62] shall be defined by MISB ST 1301 [64].

4.4.2.2 Aeronautical Domain

The Aeronautical Domain provides specific Metadata about Aerial platforms, such as blimps, rockets, manned and unmanned aircraft. The Aeronautical Domain is an extension to the Platform Domain so it only contains information that relates to Aeronautical systems. Example information in the Aeronautical Domain is: Tail Number, Wind Speed, Crabbing Angle, etc.

MISB Standard ST 0601 [61] contains elements in the Aeronautical Domain.

4.4.2.3 Combat Domain

The Combat Domain provides Metadata about weapons stores that may be included with Motion Imagery Systems.

MISB Standard ST 0601 [61] contains elements in the Combat Domain.

4.4.2.4 Exploitation Domain

The Exploitation Domain is Metadata created to assist Motion Imagery Exploitation. The Exploitation Domain is an extension to the Image Space Domain. Exploitation tools and Motion Imagery pre-processing systems can generate Exploitation Domain Metadata; examples of tools are Annotations and Object Detection and Tracking.

The following standards are included in the Exploitation Domain; these standards are mandated when providing the capabilities outlined in each of the following documents.

- MISB ST 0602 [49] provides direction on the creation of "Annotation" KLV metadata to allow for the creation, dissemination, and display of visual cues to enhance the exploitation of Motion Imagery.
- MISB ST 0903 [65] defines KLV metadata used to deliver Video Moving Target Indicator (VMTI) and Motion Imagery derived track metadata, the relationship between the VMTI metadata and other relevant standards, and gives implementation guidance for the VMTI Metadata.
- MISB ST 0808 [66] documents KLV Metadata supporting the creation, dissemination, and display of supplemental text to enhance the exploitation of Motion Imagery.
- MISB ST 0806 [67] defines KLV Metadata that supports a Remote Video Terminal (RVT).

4.4.2.5 Image Space Domain

The Image Space Domain states or computes Image Space Information. Image Space information is either the relative or absolute position (e.g. Latitude/Longitude/Elevation) of each Pixel in every Image. Specifying this information for each Pixel can be very bandwidth intensive, so estimates and models are employed to compute the Image Space information. Image Space models can use Platform Dynamics (platform position and orientation) from the Platform Domain and Sensor Dynamics from the Sensor Domain to compute the Pixel locations along with associated error estimates.

Image Space information is in several MISB documents. MISB Standard ST 0601 [61] contains elements that provide a threshold level of Image Space information. MISB ST 0801 [68] contains elements that provide data for a photogrammetric level of Image Space information.

Requirement	
MISP-2015.1-70	When implementing MISB ST 0801 [68] the threshold and objective profiles for photogrammetric Metadata elements shall be defined by MISB ST 1107 [69].

The following requirements reference MISB Standards that support Image Space processing; these standards are mandated when providing the functions listed in the Requirement.

Requirement(s)	
MISP-2015.1-71	Transforming two-dimensional Motion Imagery from one coordinate system into a second two-dimensional coordinate system shall comply with MISB ST 1202 [70].
MISP-2015.1-72	When Standard Deviation and Correlation coefficient Metadata is available, it shall be provided in accordance with MISB ST 1010 [71].

MISB ST 1002 [72] presents the KLV Metadata necessary for the dissemination of an array of range data collected from the Standoff Precision Identification in Three-Dimensions (SPI-3D) LADAR sensor.

4.4.2.6 Meteorological Domain

The Meteorological Domain conveys atmospheric and weather Metadata. MISB ST 0809 [73] defines the Metadata and KLV structures for the Meteorological Domain.

4.4.2.7 Platform Domain

The Platform Domain provides the position, kinematics and orientation Metadata of the platform. MISB Standard ST 0601 [61] contains elements in the Platform Domain.

4.4.2.8 Quality Domain

The Quality Domain Metadata describes Motion Imagery quality at different points along the Functional Model beginning at the Imager all the way through Exploitation. Quality Metadata serves two purposes: 1) it provides a measure of the health of the Motion Imagery at various points in delivery; and 2) it provides the exploiter with a measure of the goodness of the Motion Imagery.

- MISB ST 1108 [74] defines Metadata to express Motion Imagery interpretability and quality (IQ). In addition it allows associated Image chips or quality-related features to be sent in an MPEG-2 transport stream to support reduced bandwidth, partial-reference techniques for IQ estimation at the receiver.

To understand the fidelity that a Motion Imagery System is capable of providing; that is, how faithful a signal is received as compared to its origin, calibration is needed. Once calibrated, the system should be checked periodically to assure it is functioning properly. Motion Imagery test files provide known data that can be used to optimize end-to-end performance, and then for benchmark comparisons over a systems lifecycle.

- MISB ST 1205 [75] provides a file and Metadata nomenclature for injected Motion Imagery test sequences.

For subjective rating of Motion Imagery the V-NIIRS (Video-National Imagery Interpretability Rating Scale) was developed. A companion document for Video Interpretability and Quality Measurement and Prediction provides objective calculations suitable for inclusion into MISB ST 1108.

- MISB ST 0901 [76] documents a subjective quality scale for rating the intelligence value of airborne Motion Imagery in the visible spectrum.

- MISB RP 1203 [5] describes two equations: 1) the V-NIIRS interpretability estimation equation that predicts the potential of the Motion Imagery to complete the tasks described in MISB ST 0901; 2) a Motion Imagery quality equation that predicts the overall appearance of the Motion Imagery. The calculated interpretability and quality metrics can be inserted into Metadata as defined in MISB ST 1108.

4.4.2.9 Security Domain

The Security Domain provides Metadata about the allowed access to Motion Imagery Data.

MISB ST 0102 [63] provides direction on the use of security Metadata in Motion Imagery applications. It is mandatory that Motion Imagery Data be marked correctly and consistently with security classification and other security administration information. The approved practices in this standard are mandatory for all Motion Imagery Data.

Requirement	
MISP-2015.1-73	Motion Imagery shall include Security Metadata in accordance with MISB ST 0102 [63].

4.4.2.10 Sensor Domain

The Sensor Domain provides the position, kinematics and orientation Metadata of the Sensor along with Sensor Characteristics. Sensor Domain information is described in several MISB documents; MISB Standard ST 0601 [61] provides basic Metadata and MISB ST 0801 [68] provides photogrammetric Metadata.

4.4.2.11 Synthetic Aperture Radar (SAR) Domain

The Synthetic Aperture Radar (SAR) Domain provides Metadata about SAR Motion Imagery. MISB ST 1206 [77] defines the content and KLV metadata necessary to exploit both sequential synthetic aperture radar (SAR) imagery and sequential SAR coherent change products as Motion Imagery.

Requirement	
MISP-2015.1-74	When implementing MISB ST 1206 [77] the threshold profiles for Synthetic Aperture Radar Motion Imagery Metadata elements shall be defined by MISB ST 1403 [78].

4.4.2.12 Temporal Domain

The Temporal Domain is Metadata about time and its accuracy. This information relies on an absolute, reliable, common time reference, which is essential in time stamping Motion Imagery and Metadata collected in operations. MISB ST 0603 [11] defines a Precision Time Stamp derived from Coordinated Universal Time (UTC).

4.4.3 Application Areas and Collections

Motion Imagery is used for many different applications, and for each of these applications a Collection defines the Domain(s) needed to support that application.

4.4.4 Airborne Collection

The Airborne Collection contains information and rules from several Domains: Administrative, Aeronautical, Combat, Image Space, Platform, SAR, Sensor, Security and Temporal. Each Domain provides requirements and rules of use.

It is mandatory for airborne platforms that produce Motion Imagery to incorporate the Motion Imagery Sensor Minimum Metadata Set (MISMMS), which enables the basic capabilities of Situational Awareness, Discovery & Retrieval, and Cross-Domain Dissemination. MISMMS is defined in MISB ST 0902 [79], and is a prerequisite for MISP compliance.

Requirement	
MISP-2015.1-75	Motion Imagery shall contain Motion Imagery Sensor Minimum Metadata in accordance with MISB ST 0902 [79].

4.4.4.1 Airborne - UAS Collection

The Airborne - UAS Collection is defined in MISB ST 0601 [61]. MISB ST 0601 describes the means for reliable, bandwidth-efficient exchange of Metadata among UAS Motion Imagery Systems.

4.4.5 Ground Collection

The MISP currently does not specify a Collection for Ground applications; therefore, it is recommended to use the Airborne Collection.

4.4.6 Sea Collection

The MISP currently does not specify a Collection for Sea applications; therefore, it is recommended to use the Airborne Collection.

4.4.6.1 Sea - Below Surface Collection

The MISP currently does not specify a Collection for Below Surface applications; therefore, it is recommended to use the Airborne Collection.

4.4.7 Space Collection

The MISP currently does not specify a Collection for Space applications; therefore, it is recommended to use the Airborne Collection.

4.4.8 Metadata Registries

Many MISP metadata sets are constructed using Key Length Value (KLV) encodings. The unique Key and its data type are defined in either the SMPTE RP 210 or MISB ST 0807 metadata dictionaries. MISB ST 0607 documents processes for the establishment and administration of the MISB Metadata Registry. These documents with their corresponding references are given in Table 8.

Table 8: Metadata Registry Documents

Document	Description
SMPTE RP 210 [80]	Metadata Element Dictionary Structure
MISB ST 0607 [81]	MISB Metadata Registry and Processes
MISB ST 0807 [82]	MISB KLV Metadata Registry

5 DISSEMINATION

Motion Imagery Data is often produced some distance away from those who control and/or exploit it. The action of transmitting Motion Imagery Data from a source (i.e. Imager, Platform or Control Station) to one or more users is called Dissemination. Transmitting Motion Imagery Data can affect end users in two ways: Quality and Latency.

When Disseminating Motion Imagery the quality is impacted by the compression applied to the Motion Imagery and data losses during transmission. Similarly, Metadata can be impacted by data losses. Latency is a measure of amount of the time it takes to move data from one point to another in a Motion Imagery System. Total Latency is the elapsed time from an occurrence in the Scene to when that occurrence is viewed in the Motion Imagery at its destination. When Total Latency is significant, a platform controller may not be able to accurately control the Imager(s), and an end user may not be able to coordinate with other users or Intel sources in real time. Therefore, minimizing Total Latency is an overarching design goal, especially for real time applications.

Although many technologies exist for transmitting Motion Imagery, MISB recommends industry standard protocols like Internet Protocol (IP), and in addition, User Data Protocol (UDP [83]) and Transmission Control Protocol (TCP) [84].

5.1 Internet Protocols

The Internet Protocols constitute a family of protocols used in an Internet packet-switching network to transmit data from one system to another. Table 9 provides information about the Internet Protocol family.

The method for disseminating Motion Imagery Data depends on the application. Where real time performance is critical it may be necessary to use UDP/IP. Although cast as an unreliable form of communication, there are numerous technologies and approaches to limit the impact of data errors introduced into UDP/IP; these are discussed further in the Motion Imagery Handbook [4]. In cases where latency can be tolerated, or where error-free reception is essential, TCP/IP is an appropriate method.

Table 9: Internet Protocols

Protocol Name	Description
Internet Protocol (IP)	The principle communications protocol for relaying packets across Internet networks. IP data packets (datagrams) are sent from a transmitting to receiving system using switches and routers. IP is a low-level protocol that is not used directly by applications; however, IP is used by other higher level protocols, such as UDP and TCP. When IP is used to send a series of datagrams, there is no guarantee that the datagrams will be delivered, or that they will be received in the same order they were sent, or that when they are received the datagrams will be correct (i.e. datagrams could have been undetectable corrupted).

User Data Protocol (UDP/IP)	UDP is a simple transport layer protocol based on IP for delivering UDP packets. UDP packets add limited error checking and port information to IP packets. UDP does not guarantee data delivery, or that data packets arrive in order, or that packets arrive with correct data. UDP enables one-to-one and one-to-many communication. Data sent from one system to multiple systems is called multicasting. UDP provides one of the lowest latency methods of transmitting data to a receiver, which makes it suitable for time-sensitive and streaming data applications. UDP multicasting is used in delivering Motion Imagery Data to multiple systems at once, which reduces overall network bandwidth.
Transmission Control Protocol (TCP/IP)	TCP is a transport layer protocol that provides reliable guaranteed delivery of data, with packets in order and with error checking. This is accomplished by validating every received packet with the data sender which adds latency. Therefore, TCP does not guarantee time-sensitive delivery of data, but finds use in the transfer of non-time-sensitive data, such as Motion Imagery Data files.

5.1.1 Real Time Protocol (RTP)

Real Time Protocol (RTP [85]) was specifically designed for delivery of A/V (Audio/Video) services over UDP/IP. In using RTP, each media type (i.e. Motion Imagery, Metadata, and Audio) is delivered as an independent data stream (i.e. as RTP/UDP/IP). Relational timing information for synchronizing the individual data streams at a receiver is published in a companion protocol called Real Time Control Protocol (RTCP). RTP and RTCP are typically used in bandwidth-constrained environments, where choosing a subset of media types can be made (i.e. only send metadata until Motion Imagery is needed). In other uses, RTP is encapsulated in UDP/IP to improve transmission robustness, where its time stamp and packet number aide packet loss and out-of-order packet detection.

5.2 Transmitting Class 0 Motion Imagery

The transmission of Class 0 Motion Imagery generally occurs between components within a Motion Imagery System, such as Imager to Encoder, Decoder to display, etc., or within a production facility supported by a high-bandwidth wired infrastructure. For inter-equipment connection, SDI (Serial Digital Interface), UDP/IP, and a variety of other technologies may be used. RTP/UDP/IP transmission is common in long haul (many miles) transmission.

5.3 Transmitting Class 1 Motion Imagery

The Dissemination of Class 1 Motion Imagery includes both wired and wireless transmission. In applications that require real-time delivery, Class 1 Motion Imagery is disseminated using MPEG-2 Transport Stream (MPEG-2 TS) over UDP/IP, MPEG-2 Transport Stream over RTP/UDP/IP, or RTP with RTCP. Non-time-sensitive applications can use TCP/IP for delivery, where received data may need to be cached for a period of time to enable smooth playback (which adds latency).

5.3.1 MPEG-2 Transport Stream over UDP/IP

The MPEG-2 Transport Stream (MPEG-2 TS) is a widely used Container for disseminating Motion Imagery Data. For example, Motion Imagery Data transmitted from an airborne platform

is typically in a MPEG-2 TS Container, as well as to points within a network that support Exploitation. MPEG-2 TS is commonly used in delivering Motion Imagery Data over IP as well. The MISP provides guidance on inserting MPEG-2 TS packets into UDP packets, see MISB ST 1402 [56]. This guidance assures off-the-shelf products can properly decode the Motion Imagery Data.

5.3.2 MPEG-2 Transport Stream over RTP/UDP/IP

MPEG-2 TS can be encapsulated in RTP to take advantage of the time stamp and packet number contained in the RTP header. Information for encapsulating Motion Imagery Data and MPEG-2 TS in RTP can be found in MISB ST 0804 [86], which is the basis for the following requirement.

Requirement	
MISP-2015.1-76	A MPEG-2 Transport Stream encapsulated in Real Time Protocol (RTP) shall comply with MISB ST 0804 [86].

5.3.2.1 RTP with RTCP

RTP with RTCP provides a second means to deliver Class 1 Motion Imagery. MISB ST 0804 [86] provides guidance on the proper use of RTP for the delivery of Motion Imagery, Metadata, and Audio.

Requirement(s)	
MISP-2015.1-77	Class 1 Motion Imagery encapsulated in Real Time Protocol (RTP) shall comply with MISB ST 0804 [86].
MISP-2015.1-78	Class 2 Motion Imagery encapsulated in Real Time Protocol (RTP) shall comply with MISB ST 0804 [86].

- MISB RP 1302 [87] describes a method to insert KLV-encoded Metadata in a Session Description Protocol (SDP), and is recommended guidance when adding security markings to a RTP stream.

5.3.2.2 Error Handling

Monitoring the health of a delivery system is important in detecting irregularities in received data. Both MPEG-2 TS and RTP provide mechanisms to aide detection of missing and lost data packets. How lost and damaged packets are handled by a Decoder, however, depends on its implementation. Many MISP defined KLV metadata sets include error detection (i.e. cyclic redundancy check or CRC) to validate that the transmitted and received data match. When errors are detected it is important receivers properly handle the error and only disregard the erroneous metadata.

5.4 Transmitting Class 2 Motion Imagery

Class 2 Motion Imagery is generally stored to a file system, where Motion Imagery Data is extracted using a TCP/IP connection. One method for delivery of Class 2 Motion Imagery is JPEG2000 Interactive Protocol (JPIP), which relies on TCP/IP. A second method for delivery of Class 2 Motion Imagery is conversion to Class 1 Motion Imagery, where the dissemination methods for Class 1 Motion Imagery can be used. Extracting and disseminating Class 1 Motion Imagery from Class 2 Motion Imagery is discussed in Section 6.3.

5.4.1 JPEG Interactive Protocol (JPIP)

JPEG2000 Interactive Protocol (JPIP) can be used for delivery of Class 2 Motion Imagery. JPIP is useful for systems that collect and compress Class 2 Motion Imagery using JPEG 2000 with dissemination over reduced bandwidth links. MISB RP 0811 [88] defines a JPEG 2000 Interactive Protocol (JPIP) Profile for client/server interaction. It defines the expected behavior for client/server interactions for JPEG 2000 compressed imagery within the context of the JPIP protocol. RP 0811 does not, however, address the delivery of metadata elements within JPIP.

Requirement	
MISP-2015.1-79	JPEG2000 Interactive Protocol (JPIP) shall be implemented in accordance with MISB RP 0811 [88].

Class 2 Motion Imagery converted into Class 1 Motion Imagery may be transmitted according to the methods described in Section 5.3.

5.5 Transmitting Standalone Metadata

There are situations where Metadata needs to be transmitted separately from the Motion Imagery. Metadata, in the form of KLV can be transmitted using UDP/IP, TCP/IP or RTP/UDP/IP. Guidance for transmitting metadata using RTP is found in MISB ST 0804 [86]. Receivers of KLV can detect if errors have occurred. Other formats of Metadata that do not provide error detection should use a reliable transport (i.e. TCP/IP) when possible.

6 EXTERNAL INTERFACES

Systems outside of the Motion Imagery ecosphere need to communicate with Motion Imagery Data. This section identifies MISB guidance for interfacing to other external systems.

6.1 Cursor on Target (CoT)

Cursor on Target (CoT) is a simple messaging format for situational awareness and command-and-control functions. In order to facilitate interoperability, recommended conversions from ST 0601 [61] KLV metadata tags to two basic CoT schema messages (Platform Position and Sensor Point-of-Interest (SPOI)) are presented in MISB ST 0805 [89].

Requirement	
MISP-2015.1-80	KLV to Cursor-on-Target (CoT) encoding shall be in accordance with MISB ST 0805 [89].

6.2 STANAG 4559 Data Model

MISB RP 0813 [90] describes the necessary conditions for integration of Motion Imagery products into the STANAG 4559 [91] Data Model and Interface, which is based on the MAJIIC (Multi-sensor Aerospace-ground Joint Intelligence, Surveillance and Reconnaissance Interoperability Coalition) Coalition Shared Data (CSD).

6.3 STANAG 4586 Control of Motion Imagery Payloads

Direction on compression, container and delivery protocol choices for disseminating Class 1 Motion Imagery from a Class 0 Motion Imagery or Class 2 Motion Imagery source is provided by MISB ST 1101 [92]. ST 1101 references a number of STANAG 4586 [93] control messages for directing a Motion Imagery Sensor, selecting the compression, container and delivery format of Class 1 Motion Imagery, and choosing metadata according to mission needs.

Requirement	
MISP-2015.1-81	When requesting Class 1 Motion Imagery or Class 2 Motion Imagery from a platform that supports MISB ST 1101 the use of messages shall comply with MISB ST 1101 [92].

Appendix A Deprecated/Retired Standards & Requirements

A.1 Deprecated/Retired Standards Documents

The standards documents listed in this section are considered legacy. Legacy indicates outdated technologies no longer recommended for new implementations; such standards documents have a status of "Deprecated". A period of time is afforded before disallowing its use because a "Deprecated" standard may be actively fielded; this is done to help maintain backward compatibility. Assuming a 5-10 year technology refresh cycle, at that time a "Deprecated" standard will move to the status of "Retired." Once "Retired" the standard is no longer required to be supported and should not be used for new implementations.

As a matter of practice, a standard may be superseded by a new revision of that standard, or a new standard all together. A superseded standard is "Deprecated". Finally, a standard may be recast as one or more requirements; such standards no longer exist as standalone references and are likewise "Deprecated".

Document Number	Title	Status	Effective Date
MISB EG 0104 [94]	Predator UAV Basic Universal Metadata Set	Deprecated	Sep 2008
MISB RP 0103 [95]	Timing Reconciliation Universal Metadata Set for Digital Motion Imagery	Deprecated	May 2009
MISB RP 0608 [96]	Motion Imagery Identification [Superseded by MISB ST 1204]	Deprecated	Oct 2013
MISB RP 0705 [97]	LVSD Compression Profile [Superseded by BPJ2K01.10]	Deprecated	Oct 2013
MISB EG 0810 [98]	Profile 2: KLV for LVSD Applications	Deprecated	Oct 2013
MISB ST 9701 [99]	MPEG-2 Transport Stream [Superseded by MISB ST 1402]	Deprecated	Feb 2014
MISB ST 9708 [100]	Imbedded Time Reference for Motion Imagery Systems [Superseded by MISB ST 0604]	Deprecated	Feb 2014
MISB ST 9715 [101]	Time Reference Synchronization [Superseded by MISB ST 0603]	Deprecated	Feb 2014
MISB RP 9717 [102]	Packing KLV Packets into MPEG-2 Systems Streams [Superseded by MISB ST 1402]	Deprecated	Feb 2014
MISB RP 0101 [103]	Use of MPEG-2 System Streams in Digital Motion Imagery Systems [Superseded by MISB ST 1402]	Deprecated	Feb 2014
MISB ST 9601 [104]	Standard Definition Digital Motion Imagery, Compression Systems [Recast as REQs MISP-2015.1-32,-33,-34,-35,-47,-50]	Deprecated	Oct 2014
MISB ST 9702 [105]	Standard Definition Digital Motion Imagery Sampling Structure [Recast as REQ MISP-2015.1-18]	Deprecated	Oct 2014

MISB ST 9703 [106]	Digital Motion Imagery, Uncompressed Baseband Signal Transport and Processing [Recast as REQs MISP-2015.1-23,-25,-31]	Deprecated	Oct 2014
MISB ST 9704 [107]	Digital Motion Imagery, Compression Conversions [Recast as REQ MISP-2015.1-17]	Deprecated	Oct 2014
MISB ST 9705 [108]	Standard Definition Digital Motion Imagery, Format Conversions [Recast as REQ MISP-2015.1-17]	Deprecated	Oct 2014
MISB ST 9706 [109]	Motion Imagery Still Frames [Recast as REQ MISP-2015.1-16]	Deprecated	Oct 2014
MISB ST 9707 [110]	Standard Definition Digital Motion Imagery Tape Recorder, Digital Motion Imagery Servers, and Similar Systems Input / Output Protocol [Recast as REQ MISP-2015.1-23]	Deprecated	Oct 2014
MISB ST 9709 [111]	Use of Closed Captioning for Core Metadata Analog Video Encoding [Recast as REQ MISP-2015.1-83 (Deprecated)]	Deprecated	Oct 2014
MISB ST 9710 [112]	High Definition Television Systems (HDTV) [Recast as REQs MISP-2015.1-02,-20,-21,-25]	Deprecated	Oct 2014
MISB ST 9711 [113]	Intelligence Motion Imagery Index, Geospatial Metadata	Deprecated	Oct 2014
MISB ST 9712 [114]	Intelligence Motion Imagery Index, Content Description Metadata (Dynamic Metadata Dictionary Structure and Contents) [Superseded by MISB ST 0607 & ST 0807]	Deprecated	Oct 2014
MISB ST 9713 [115]	Data Encoding Using Key-Length-Value [Recast as REQ MISP-2015.1-07]	Deprecated	Oct 2014
MISB ST 9714 [116]	Time Code Embedding	Deprecated	Oct 2014
MISB ST 9716 [117]	Packing KLV Packets into SMPTE 291 Ancillary Data Packets [Superseded by MISB ST 0605]	Deprecated	Oct 2014
MISB ST 9718 [118]	Packing KLV Packets into AES3 Serial Digital Audio Streams	Deprecated	Oct 2014
MISB ST 9719 [119]	Analog Video Migration [Recast as REQs MISP-2015.1-06,-17,-67]	Deprecated	Oct 2014
MISB RP 9720 [120]	Motion Imagery System Matrix (MISM)	Deprecated	Oct 2014
MISB RP 9721 [121]	Motion Imagery Tape Formats	Deprecated	Oct 2014
MISB ST 9723 [122]	Compressed High Definition Advanced Television (ATV) and associated Motion Imagery Systems [Recast as REQs MISP-2015.1-32,-33,-34,-35,-36,-38,-39,-40,-41,-47]	Deprecated	Oct 2014
MISB ST 9803 [123]	Serial Data Transport Interface	Deprecated	Oct 2014

MISB ST 9811 [124]	Progressively Scanned Enhanced Definition Digital Motion Imagery [Recast as REQ MISP-2015.1-19]	Deprecated	Oct 2014
MISB ST 9901 [125]	Fiber Optic Interfaces Uncompressed Baseband Signal Transport and Processing [Recast as REQ MISP-2015.1-84 (Deprecated)]	Deprecated	Oct 2014
MISB RP 9902 [126]	Authorized Limited Applications of DV Format Video	Deprecated	Oct 2014
MISB RP 0106 [127]	Advanced Authoring Format [Recast as REQ MISP-2015.1: U.S. Specific-01 [3]]	Deprecated	Oct 2014
MISB RP 0108 [128]	Material Exchange Format [Recast as REQs MISP-2015.1-12,-13,-14,-15]	Deprecated	Oct 2014
MISB ST 0201 [129]	Uncompressed Enhanced Motion Imagery Baseband Signal Transport [Recast as REQ MISP-2015.1-24]	Deprecated	Oct 2014
MISB ST 0202 [130]	Compressed Enhanced Definition Advanced Television (ATV) and associated Motion Imagery Systems [Recast as REQs MISP-2015.1-32,-33,-34,-35,-38,-39,-40,-41,-47]	Deprecated	Oct 2014
MISB RP 0401 [131]	Infrared Motion Imagery System Matrix (IR MISM)	Deprecated	Oct 2014
MISB RP 0402 [132]	Parallel Interface for Infrared Motion Imagery	Deprecated	Oct 2014
MISB RP 0606 [133]	Authorized Use of JPEG 2000 for Large Volume Streaming Data Imagery [Recast as REQ MISP-2015.1-51]	Deprecated	Oct 2014
MISB RP 1004 [134]	LVSD Motion Imagery System Matrix (LVSD MISM)	Deprecated	Oct 2014

A.2 Deprecated Requirements

In this section, requirements found across all versions of the MISP which are no longer in force are deprecated are listed.

Requirement(s)	
MISP-2015.1-82 (Deprecated)	One AES3 audio channel (one stereo pair) encoded in accordance with SMPTE ST 291 [30] and carried within the Horizontal Ancillary Space (HANC) of a Serial Digital Interface (SDI) shall be reserved for Metadata.
MISP-2015.1-83 (Deprecated)	Encoding metadata on Line 21 of the vertical interval of legacy system video shall be in accordance with CEA-608 [135] and CEA-708 [136].
MISP-2015.1-84 (Deprecated)	The transport of SMPTE ST 259 [31], SMPTE ST 292-1 [32], and SMPTE ST 424 [34] signals over fiber optic shall comply with SMPTE ST 297 [137].

Appendix B References

[1] NATO, STANAG 4609 Edition 3, 2009.

[2] MISB MISP-2015.1: U.S. Governance, Oct 2014.

[3] MISB MISP-2015.1: U.S. Specific, Oct 2014.

[4] MISB MISP-2015.1: Motion Imagery Handbook, Oct 2014.

[5] MISB RP 1203.3 Video Intrepretability and Quality Measurement and Prediction, Feb 2104.

[6] MISB TRM 1404 H.264 Compression Principles, Oct 2014.

[7] MISB RP 0904.1 H.264 Bandwidth/Quality/Latency Tradeoffs, Feb 2014.

[8] SMPTE ST 170:2004 Television - Composite Analog Video Signal - NTSC for Studio Applications.

[9] ITU-R BT.470-7 Conventional Analogue Television Systems, Feb 2005.

[10] SMPTE ST 274:2008 Television - 1920 x 1080 Image Sample Structure, Digital Representation and Digital Timing Reference Sequence for Multiple Picture Rates.

[11] MISB ST 0603.2 Common Time Reference for Digital Motion Imagery Using Coordinated Universal Time (UTC), Feb 2014.

[12] SMPTE ST 336:2007 Data Encoding Protocol Using Key-Length-Value.

[13] MISB ST 0107.2 Bit and Byte Order for Metadata in Motion Imagery Files and Streams, Feb 2014.

[14] MISB ST 1201.1 Floating Point to Integer Mapping, Feb 2014.

[15] MISB ST 1303 Multi-Dimensional Array Pack, Feb 2014.

[16] SMPTE ST 377-1:2011 Material Exchange Format (MXF) - File Format Specification.

[17] SMPTE ST 378:2004 Television - Material Exchange Format (MXF) - Operational Pattern 1A (Single Item, Single Package).

[18] SMPTE ST 391:2004 Television - Material Exchange Format (MXF) – Operational Pattern 1b (Single Item, Ganged Packages).

[19] SMPTE ST 379-1:2009 Material Exchange Format (MXF) - MXF Generic Container.

[20] SMPTE ST 381-1:2005 Material Exchange Format (MXF) - Mapping MPEG streams into the MXF Generic Container.

[21] MISB ST 0301.5 MISB Profile for Aerial Surveillance and Photogrammetry Applications (ASPA), Jul 2010.

[22] MIL-STD-2500C National Imagery Transmission Format Version 2.1 for the National Imagery for the National Imagery Transmission Format, May 2006.

[23] NATO, STANAG 4545 NATO Secondary Imagery Format (NSIF), Ed. 2, May 2013.

[24] MISB RP 1011.1 LVSD Motion Imagery Streaming, Feb 2014.

[25] ITU-R BT.601-7 (03/2011) Studio encoding parameters for digital television for standard 4:3 and wide-screen 16:9 aspect ratios.

[26] ITU-R BT.1358-1 (09/2007) Studio Parameters of 625 and 525 Line Progressive Television.

[27] SMPTE ST 296:2012 1280 x 720 Progressive Image 4:2:2 and 4:4:4 Sample Structure - Analog and Digital Representation and Analog Interface.

[28] SMPTE ST 2036-1:2013 Ultra High Definition Television - Image Parameter Values for Program Production.

[29] MISB ST 0404.1 Compression for Infrared Motion Imagery, Feb 2014.

[30] SMPTE ST 291-1:2011 Ancillary Data Packet and Space Formatting.

[31] SMPTE ST 259:2008 ST 259:Television - SDTV Digital Signal/Data - Serial Digital Interface.

[32] SMPTE ST 292-1:2011 1.5 Gb/s Signal/Data Serial Interface.

[33] SMPTE ST 349:2001 Television - Transport of Alternate Source Image Formats though SMPTE 292M.

[34] SMPTE ST 424:2012 3 Gb/s Signal/Data Serial Interface.

[35] SMPTE ST 435-2:2012 10 Gb/s Serial Signal/Data Interface - Part 2: 10.692 Gb/s Stream - Basic Stream Data Mapping.

[36] SMPTE ST 355:2001 Television - Format for Non-PCM Audio and Data in AES3 - KLV Data Type.

[37] SMPTE ST 337:2000 Television - Format for Non-PCM Audio and Data in an AES3 Serial Digital Audio Interface.

[38] SMPTE ST 339:2004 Television - Format for Non-PCM Audio and Data in AES3 - Generic Data Types.

[39] Audio Engineering Society AES3 standard for digital audio - Digital input-output interfacing - Serial transmission format for two-channel lineraly-represented digital audio data - Part 1: Audio Content, 2009.

[40] SMPTE ST 299-1:2010 24-Bit Digital Audio Format for SMPTE 292 Bit-Serial Interface.

[41] SMPTE ST 299-2:2010 Extension of the 24-Bit Digital Audio Format to 32 Channels for 3 Gb/s Bit-Serial Interfaces.

[42] SMPTE ST 425-1:2011 Source Image Format and Ancillary Data Mapping for the 3 Gb/s Serial Interface.

[43] SMPTE ST 2036-3:2012 Ultra High Definition Television - Mapping into Single-link or Multi-link 10 Gb/s Serial/Data Interface.

[44] MISB ST 0403.2 Digital Representation and Source Interface Formats for Infrared Motion Imagery Mapped into 1280 x 720 format Bit-Serial Digital Interface, Feb 2014.

[45] MISB ST 0605.4 Time Stamping and Metadata Transport in High Definition Uncompressed Motion Imagery, Feb 2014.

[46] ITU-T Rec. H.264 (04/2013) Advanced Video Codng for Generic Audiovisual Serices.

[47] ISO/IEC 13818-2:2013 Information Technology - Generic coding of moving pictures and associated audio information: Video.

[48] MISB RP 0802.2 H.264/AVC Motion Imagery Coding, Feb 2014.

[49] MISB ST 0602.4 Annotation Metadata Set, Feb 2014.

[50] MISB ST 0604.3 Time Stamping Compressed Motion Imagery, Feb 2014.

[51] MISB RP 0701 Common Metadata System: Structure, Aug 2007.

[52] MISB ST 1001.1 Audio Encoding, Feb 2014.

[53] ISO/IEC 13818-1:2013 Information technology - Generic coding of moving pictures and associated audio information: Systems.

[54] MISB TRM 0909.4 Constructing a MISP Compliant File/Stream, Oct 2014.

[55] ITU-T Rec. H.222.0 (06/2012) Information technology - Generic Coding of Moving Pictures and Associated Audio Information: Systems.

[56] MISB ST 1402 MPEG-2 Transport of Compressed Motion Imagery and Metadata, Feb 2014.

[57] ISO/IEC 13818-4:2004 Information Technology - Generic coding of moving pictures and associated audio information: Compliance Testing.

[58] ISO/IEC BIIF Profile BPJ2K.01.10 BIIF Profile for JPEG 2000, Apr 2009.

[59] ISO/IEC 15444-4:2004 JPEG2000 Image Coding System - Part 4: Conformance Testing.

[60] NTB National Imagery Transmission Format Version 2.1 Motion Imagery Extensions.

[61] MISB ST 0601.8 UAS Datalink Local Set, Oct 2014.

[62] MISB ST 1204.1 Motion Imagery Identification System (MIIS) Core Identifier, Oct 2013.

[63] MISB ST 0102.11 Security Metadata Universal and Local Sets for Digital Motion Imagery, Oct 2014.

[64] MISB ST 1301.2 Motion Imagery Identification System - Augmentation Identifiers, Feb 2014.

[65] MISB ST 0903.4 Video Moving Target Indicator and Track Metadata, Oct 2014.

[66] MISB ST 0808.1 Ancillary Text Metadata Sets, Feb 2014.

[67] MISB ST 0806.4 Remote Video Terminal Metadata Set, Feb 2014.

[68] MISB ST 0801.5 Photogrammetry Metadata Set for Digital Motion Imagery, Feb 2014.

[69] MISB ST 1107.1 Metric Geopositioning Metadata Set, Feb 2014.

[70] MISB ST 1202.1 Generalized Transformation Parameters, Feb 2014.

[71] MISB ST 1010.1 Generalized Standard Deviation and Correlation Coefficient Metadata, Feb 2014.

[72] MISB ST 1002.1 Range Motion Imagery, Feb 2014.

[73] MISB ST 0809.1 KLV Representation of Meteorological Data, Feb 2014.

[74] MISB ST 1108.2 Motion Imagery Interpretability and Quality Metadata, Feb 2014.

[75] MISB ST 1205.1 Motion Imagery Test Sequences, Feb 2014.

[76] MISB ST 0901.2 Video-National Imagery Interpretability Rating Scale, Feb 2014.

[77] MISB ST 1206 SAR Motion Imagery Metadata, Feb 2014.

[78] MISB ST 1403 SARMI Threshold Metadata Sets, Feb 2014.

[79] MISB ST 0902.4 Motion Imagery Sensor Minimum Metadata Set, Oct 2014.

[80] SMPTE RP 210v13:2012 Metadata Element Dictionary.

[81] MISB ST 0607.3 MISB Metadata Registry and Processes, Oct 2014.

[82] MISB ST 0807.14 MISB KLV Metadata Dictionary, Oct 2014.

[83] IETF RFC 768 User Datagram Protocol, Aug 1980.

[84] IETF RFC 793 Transmission Control Protocol, Sep 1981.
[85] IETF RFC 3550 RTP: A Transport Protocol for Real-Time Applications, Jul 2003.
[86] MISB ST 0804.4 Real-Time Protocol for Motion Imagery and Metadata, Feb 2014.
[87] MISB RP 1302 Inserting KLV in Session Description Protocol (SDP), Feb 2014.
[88] MISB RP 0811.1 JPIP Profile (Client/Server Functions), Oct 2014.
[89] MISB ST 0805.1 KLV to Cursor-on-Target (CoT) Conversions, Feb 2014.
[90] MISB RP 0813.1 Integration of Motion Imagery into the STANAG 4559 Data Model, Feb 2014.
[91] STANAG 4559 NATO Standard ISR Library Interface Edition 2, Nov 2010.
[92] MISB ST 1101 STANAG 4586 Control on UAS Motion Imagery Payloads, Oct 2014.
[93] STANAG 4686 Edition 2, Amendment 2, Nov 2007.
[94] MISB EG 0104.5 Predator UAV Basic Universal Metadata Set, Dec 2006.
[95] MISB RP 0103.1 Timing Reconciliation Universal Metadata Set for Digital Motion Imagery, Oct 2001.
[96] MISB RP 0608.2 Motion Imagery Identification, Dec 2009.
[97] MISB RP 0705.2 LVSD Compression Profile, Dec 2008.
[98] MISB EG 0810.2 Profile 2: KLV for LVSD Applications, Jun 2010.
[99] MISB ST 9701 MPEG-2 Transport Stream, MISP 6.6.
[100] MISB ST 9708 Imbedded Time Reference for Motion Imagery Systems, MISP 6.6.
[101] MISB ST 9715 Time Reference Synchronization, MISP 6.6.
[102] MISB RP 9717 Packing KLV Packets into MPEG-2 Systems Streams, MISP 6.6.
[103] MISB RP 0101.1 Use of MPEG-2 System Streams in Digital Motion Imagery Systems, Jan 2011.
[104] MISB ST 9601 Standard Definition Digital Motion Imagery, Compression Systems, MISP 6.6.
[105] MISB ST 9702 Standard Definition Digital Motion Imagery Sampling Structure, MISP 6.6.
[106] MISB ST 9703 Digital Motion Imagery, Uncompressed Baseband Signal Transport and Processing, MISP 6.6.
[107] MISB ST 9704 Digital Motion Imagery, Compression Conversions, MISP 6.6.
[108] MISB ST 9705 Standard Definition Digital Motion Imagery, Format Conversions, MISP 6.6.
[109] MISB ST 9706 Motion Imagery Still Frames, MISP 6.6.
[110] MISB ST 9707 Standard Definition Digital Motion Imagery Tape Recorder, Digital Motion Imagery Servers, and Similar Systems Input / Output Protocol, MISP 6.6.
[111] MISB ST 9709 Use of Closed Captioning for Core Metadata Analog Video Encoding, MISP 6.6.
[112] MISB ST 9710 High Definition Television Systems (HDTV), MISP 6.6.
[113] MISB ST 9711 Intelligence Motion Imagery Index, Geospatial Metadata, MISP 6.6.

[114] MISB ST 9712 Intelligence Motion Imagery Index, Content Description Metadata (Dynamic Metadata Dictionary Structure and Contents), MISP 6.6.

[115] MISB ST 9713 Data Encoding Using Key-Length-Value, MISP 6.6.

[116] MISB ST 9714 Time Code Embedding, MISP 6.6.

[117] MISB ST 9716 Packing KLV Packets into SMPTE 291 Ancillary Data Packets, MISP 6.6.

[118] MISB ST 9718 Packing KLV Packets into AES3 Serial Digital Audio Streams, MISP 6.6.

[119] MISB ST 9719 Analog Video Migration, MISP 6.6.

[120] MISB RP 9720 Motion Imagery System Matrix (MISM), MISP 6.6.

[121] MISB RP 9721 Motion Imagery Tape Formats, Jan 1997.

[122] MISB ST 9723 Compressed High Definition Advanced Television (ATV) and associated Motion Imagery Systems, MISP 6.6.

[123] MISB ST 9803 Serial Data Transport Interface, MISP 6.6.

[124] MISB ST 9811 Progressively Scanned Enhanced Definition Digital Motion Imagery, MISP 6.6.

[125] MISB ST 9901 Fiber Optic Interfaces Uncompressed Baseband Signal Transport and Processing, MISP 6.6.

[126] MISB ST 9902 Authorized Limited Applications of DV Format Video (MISP 6.6), Aug 1999.

[127] MISB RP 0106 Advanced Authoring Format, MISP 6.6.

[128] MISB RP 0108 Material Exchange Format, MISP 6.6.

[129] MISB ST 0201 Uncompressed Enhanced Motion Imagery Baseband Signal Transport, MISP 6.6.

[130] MISB ST 0202 Compressed Enhanced Definition Advanced Television (ATV) and associated Motion Imagery Systems, MISP 6.6.

[131] MISB RP 0401 Infrared Motion Imagery System Matrix (IR MISM), MISP 6.6.

[132] MISB RP 0402.6 Parallel Interface for Infrared Motion Imagery, Feb 2014.

[133] MISB ST 0606 Authorized Use of JPEG 2000 for Large Volume Streaming Data Imagery, MISP 6.6.

[134] MISB RP 1004 LVSD Motion Imagery System Matrix (LVSD MISM), MISP 6.6.

[135] CEA-608-E Line 21 Data Services, Apr 2008.

[136] CEA-708-E (ANSI) Digital Television (DTV) Closed Captioning, Aug 2013.

[137] SMPTE ST 297:2006 Television - Serial Digital Fiber Transmission System for SMPTE 259, SMPTE 344, SMPTE 292 and SMPTE 424 Signals.

[138] *MISB Document Development Process*, 2014.

[139] *MISB Document Author Kit*, 2014.

Appendix C Acronyms

BMP	Bitmap image
bps	Bits per second
CoT	Cursor on Target
ED	Enhanced Definition
FPS	Frames per Second
Gb	Gigabit
HANC	Horizontal Ancillary Space
HD	High Definition
HL	High Level
Hz	Hertz
ISO	International Standards Organization
ITU	International Telecommunication Union
ITU-R	International Telecommunication Union - Radiocommunications
JPEG	Joint Photographic Experts Group
JPIP	JPEG 2000 Interactive Protocol
KLV	Key Length Value
LVMI	Large Volume Motion Imagery
Mbps	Megabits (10^6) per second
MI	Motion Imagery
MISB	Motion Imagery Standards Board
MISP	Motion Imagery Standards Profile
ML	Main Level
MP	Main Profile
MPEG	Moving Pictures Experts Group
MXF	Material Exchange Format
NATO	North Atlantic Treaty Organization
NITF	National Imagery Transmission Format Standard
NTB	NITF Technical Board
NTSC	National Television System Committee
PAL	Phase Alternating Line
RP	Recommended Practice
RTP	Real Time Protocol
SD	Standard Definition
SDI	Serial Data Interface
SDO	Standards Development Organization
SEMI	Scientific/Engineering Motion Imagery
SMPTE	Society of Motion Picture and Television Engineers
ST	Standard
TS	MPEG-2 Transport Stream
UHD	Ultra High Definition
UTC	Coordinated Universal Time
VANC	Vertical Ancillary Space
VMTI	Video Moving Target Indicator
VNIIRS	Video National Imagery Interpretation Rating Scale

Appendix D Definitions and Terms

bit rate	The speed that data is transmitted.
bit-stream	A sequence of bits that forms the representation of coded pictures and associated data forming one or more coded Motion Imagery sequences.
content	Motion Imagery, Metadata, and Audio data.
compliance	An action or behavior in correspondence with current customs, rules, or styles.
display rate	The rate in Images per second at which Motion Imagery is rendered at the display.
legacy system	Systems constructed from outdated technologies that may still be in use but are no longer recommended for new development.
MISP compliant	The ability of an implementation to create, output and/or accept Motion Imagery streams/files and recognize the component parts according to the requirements as specified the MISP.
Motion Imagery Data	Three components: Motion Imagery (see definition below), Metadata and/or Audio.
Motion Imagery	Motion Imagery is a sequence of pictures that when viewed (e.g. with a video player) must have the potential for providing informational or intelligence value (see Motion Imagery Handbook [4] for definition).
Motion Imagery System	A system that provides the functionality of collecting, encoding, processing, controlling, exploiting, viewing, and/or storing Motion Imagery.
native format	Motion Imagery from an Imager that has never been subjected to lossy compression.
Native Rate	The rate in Images per second at which Motion Imagery is captured by an Imager.
protocol	System of rules for data exchange that defines syntax, semantics and synchronization of communication.
Requirement	A capability required to meet an organization's roles, functions, and missions in current or future operations.
Sampling Format	Specifies the horizontal, vertical and temporal pixel density and the number of wavelength bands and bits per band for a Motion Imagery signal.
standard	Common, repeated and mandatory use of rules, conditions, guidelines, or characteristics for products, or related processes and production methods; and related management systems practices.
square pixel	An image pixel where the horizontal width and vertical height are the same.

Appendix E MISB Documentation

E.1 Standards (ST)

A document is eligible to be a Standard when it meets at least one of the following criteria:

- Facilitates interoperability and consistency
- Defines metadata elements

Where the MISP term Standard (ST) is used, the MISP item mandates binding technical implementation policy, and as such, should be identified in Government procurement actions as a mandatory compliance item in order for vendor offerings to be accepted by the Government.

For point of clarification, in commercial practice the majority of identified standards (notably those from SMPTE) are considered to be "voluntary" standards, where equipment manufacturers and users are free to choose to comply or to not comply with the standard. Standards, as represented in this MISP, are not considered voluntary; they are mandatory.

A document begins the standards process as "Developing", where it is authored and presented for community review and approval. Once adopted the developing Standard moves to an "Approved" status. Standards that are obsolete or replaced are declared "Deprecated", while those no longer in use are "Retired" (see [138] for more information on the standards process).

E.2 Recommended Practice (RP)

A document is considered a RP when it:

- Provides guidance that facilitates the implementation of a Standard
- Is not required for interoperability, but when used states requirements for its usage

Recommended Practices should be considered technical implementation policy. They may be identified in Government procurement actions as a mandatory compliance item in order for vendor offerings to be accepted by the Government.

E.3 Technical Reference Manual (TRM)

A TRM is an informative/educational document that does not contain requirements. A TRM may result from a study or provide additional background to practices promoted by other guidance.

E.4 Engineering Guidelines (EG)

Documents originally published as Engineering Guidelines (EG) have either been promoted to a ST or RP based on meeting the appropriate criteria listed above. The EG will not be used in future publications. Some legacy documents continue to carry this designation.

Appendix F MISB Processes

To facilitate the development of MISB ST and RP documents the following guides are available on the MISB website.

F.1 Document Development Process

A process has been defined which provides procedures to be followed for: submission of candidate standards, the election of co-authors and technical assistance, the process of review/approval, and final publication [138].

F.2 Author Kit

The Author Kit [139] provides a Microsoft Word template for developing a MISB document.